USER'S INFORMATION MANUAL

SERIES 63/64™ GAS BOILERS

TO THE INSTALLER: *This manual is the property of the owner and must be affixed near the boiler for future reference.*

TO THE OWNER: *This boiler should be inspected annually by a Qualified Service Agency.*

⚠ WARNING

If the information in this manual is not followed exactly, a fire or explosion may result causing property damage, personal injury or loss of life.

– Do not store or use gasoline or other flammable vapors and liquids in the vicinity of this or any other appliance.

– **WHAT TO DO IF YOU SMELL GAS**
  - Do not try to light any appliance.
  - Do not touch any electrical switch; do not use any phone in your building.
  - Immediately call your gas supplier from a neighbor's phone. Follow the gas supplier's instructions.
  - If you cannot reach your gas supplier, call the fire department.

– Installation and service must be performed by a qualified installer, service agency or the gas supplier.

⚠ MISE EN GARDE

Négliger de suivre ces instructions à la lettre pourrait provoquer un incendie ou une explosion causant des dégâts matériels, des blessures ou la mort.

– Ne pas ranger ou utiliser de la gazoline ou d'autres liquides ou gaz inflammables à proximité de cet appareil ou d'un autre du même type.

– **QUE FAIRE SI VOUS DÉTECTEZ UNE ODEUR DE GAZ**
  - Ne pas tenter d'allumer l'appareil.
  - Ne toucher à aucun interrupteur électrique ; n'utiliser aucun appareil téléphonique dans l'immeuble.
  - Contacter immédiatement votre fournisseur de gaz à partir du téléphone d'un voisin. Suivre les instructions données par votre fournisseur de gaz.
  - S'il est impossible de rejoindre le fournisseur de gaz, appeler le service des incendies.

– L'installation et l'entretien doivent être effectués par un installateur qualifié, une société d'entretien ou le fournisseur de gaz.

TO BE COMPLETED BY THE INSTALLER

Service Agency _____ Phone No. _____

Address _____

Boiler Model No. _____ Serial No. _____ Date of Installation: _____

PeerlessBoilers.com

PB HEAT, LLC

131 S. CHURCH ST • BALLY, PA 19503

TT8067 R2 (6/13-3M)
Printed in U.S.A.
©2013 PB Heat, LLC. All rights reserved.

Basic Operation

⚠ WARNING

Service on this boiler should be undertaken only by trained and skilled personnel from a qualified service agency.

⚠ CAUTION

Should overheating occur or the gas supply fail to shut off, do not turn off or disconnect the electrical supply to the pump. Instead, shut off the gas supply at a location external to the appliance.

Do not use this boiler if any part has been under water. Immediately call a qualified service agency to inspect the boiler and to replace any part of the control system and any gas control which has been under water.

A. General. This water boiler is a natural draft appliance and is equipped with controls for proper operation. All controls must be in proper working order. Contact a qualified service agency to provide annual maintenance as specified in the Installation, Operation and Maintenance Manual.

B. Control Locations. See Figure 1 for Control and Safety Device Locations.

1a. **Limit (Steam Boiler).** An electrical device that automatically interrupts the boiler operation when the steam pressure exceeds the "CUT IN" pressure plus the differential (1 to 5 psi). Maximum Pressure setting is 14 psig. The set point is usually less than 5 psig.

Original equipment with this boiler is a Honeywell PA404A1009. Boiler operation is interrupted when the steam pressure exceeds the the "CUT IN" pressure plus the differential. Boiler operation resumes automatically when the system pressure falls below the "CUT IN" pressure.

1b. **Limit (Water Boiler).** An electrical device that automatically interrupts the boiler operation when the water temperature exceeds the set point. Maximum temperature setting is 220°F.

Boiler operation is interrupted when the water temperature exceeds the set point. Boiler operation resumes automatically when the water temperature falls to approximately 15°F below the set point.

1c. Limit Control may incorporate a low water cut-off feature that will interrupt boiler operation upon loss of water in the boiler. If the low water cut-off function is activated to interrupt boiler operation, follow the instructions TO TURN OFF GAS TO THE APPLIANCE (see Figures 3-5) and contact a qualified service agency.

2. **Flame Rollout Switch (FRS).** An electrical device that automatically interrupts the boiler operation when excessive heat is present in the combustion area. The control is a thermal fuse device that will require replacement if it is activated. If the control has been activated to interrupt the boiler operation, do not attempt to restart the boiler. Contact a qualified service agency.

3. **Blocked Vent Switch (BVS)** An electrical device that automatically interrupts the boiler operation when there is a blockage in the vent pipe or chimney. The control is located on the side of the draft hood and is a manual reset device. If the control is activated to interrupt operation of the boiler, do not attempt to restart the boiler. Contact a qualified service agency.

4. **Pilot.** The pilot provides an ignition source for the main burners. Your boiler has either a standing (continuous) pilot or an intermittent (spark ignited) pilot. The standing pilot should always be lit while the intermittent pilot ignites only when there is a call for heat and extinguishes when the call for heat ends. See Figure 8.
5. **Gas Valve.** The gas valve monitors pilot flame and regulates gas flow to the burners and pilot.
6. **Safety Relief Valve.** A mechanical device that protects the boiler against excessive pressure. The safety relief valve can discharge a large amount of steam or hot water – the installer should provide piping to discharge water near the floor close to a floor drain. If the safety relief valve discharges water, follow the instructions TO TURN OFF GAS TO APPLIANCE on the Lighting Instructions affixed to the inside of the removable front jacket panel (see Figures 3 through 5 for typical lighting instructions), and contact a qualified service agency.

C. Lighting Instructions. Instructions to place the boiler in operation and to turn off the boiler are shown on the Lighting Instructions Label posted on the inside of the front jacket panel of the boiler. Typical lighting instructions are shown in Figures 3 through 5.

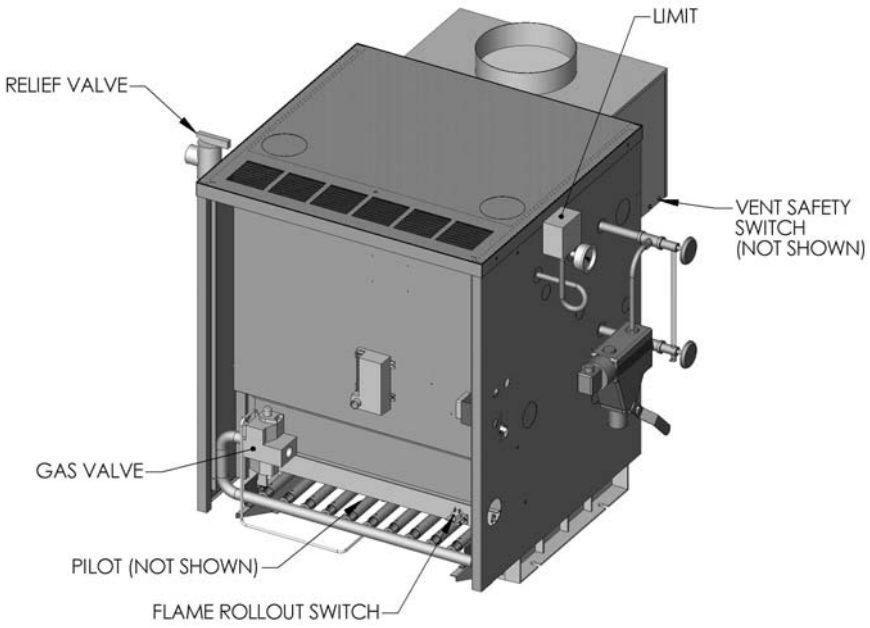

Figure 1: Control Location

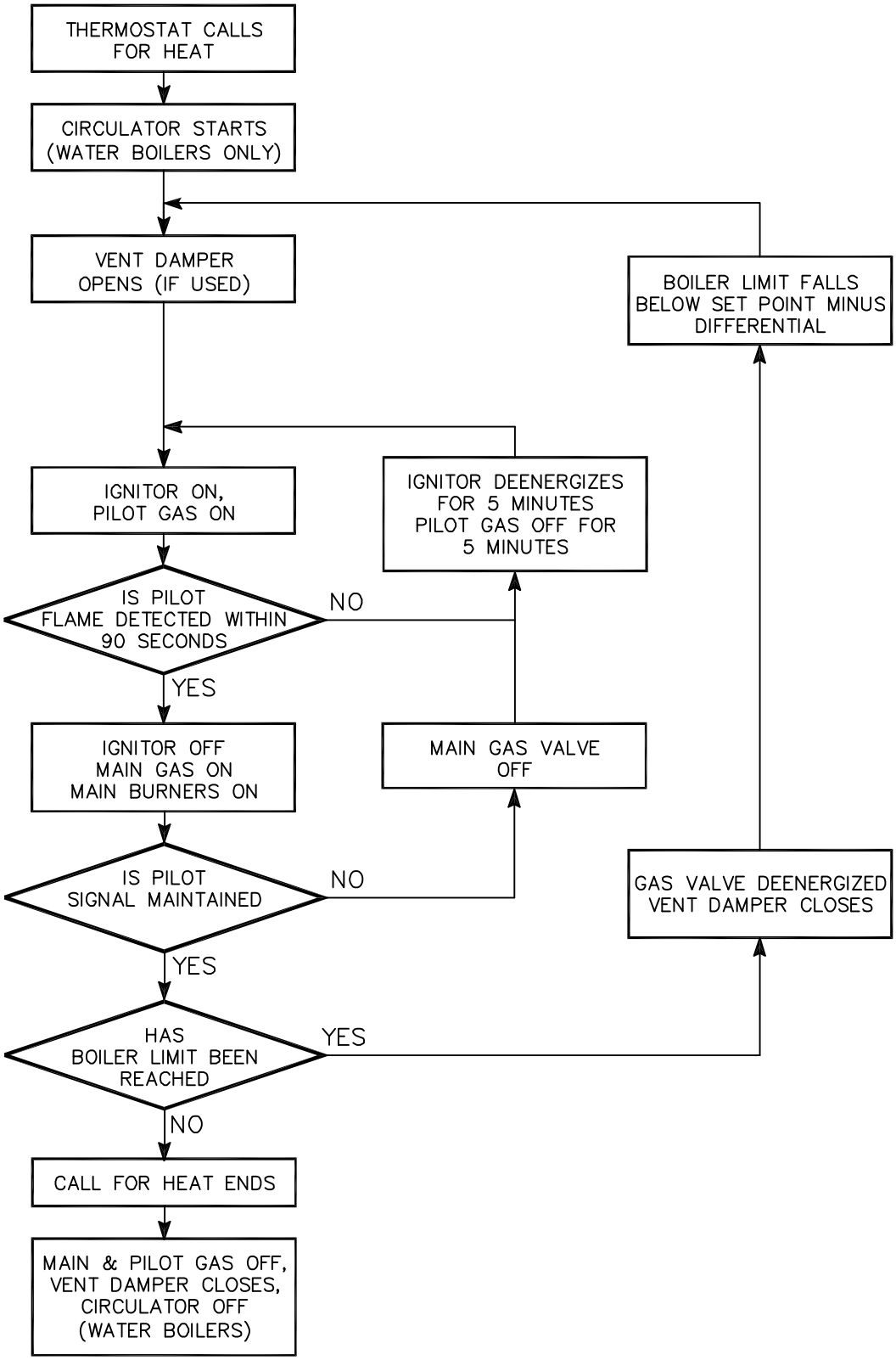

Figure 2: Sequence of Operation Intermittent Pilot

FOR YOUR SAFETY READ BEFORE LIGHTING

WARNING: If you do not follow these instructions exactly, a fire or explosion may result causing property damage, personal injury, or loss of life.

A. This appliance is equipped with an ignition device which automatically lights the pilot. Do not try to light the pilot by hand.

B. BEFORE OPERATING smell all around the appliance area for gas. Be sure to smell next to the floor because some gas is heavier than air and will settle on the floor.

WHAT TO DO IF YOU DO SMELL GAS

- Do not try to light any appliance.
- Do not touch any electric switch; do not use any phone in your building.
- Immediately call your gas supplier from a neighbor's phone. Follow the gas supplier's instructions.
- If you cannot reach your gas supplier, call the fire department.

C. Use only your hand to push in or turn the gas control knob. Never use tools. If the knob will not push in or turn by hand, don't try to repair it, call a qualified service technician. Force or attempted repair may result in a fire or explosion.

D. Do not use this appliance if any part has been under water. Immediately call a qualified service technician to inspect the appliance and to replace any part of the control system and any gas control which has been under water.

OPERATING INSTRUCTIONS

1. STOP! Read the safety information above on this label.
2. Set the thermostat or operating control to lowest setting.
3. Turn off all electric power to the appliance.
4. This appliance is equipped with an ignition device which automatically lights the pilot. Do not try to light the pilot by hand.

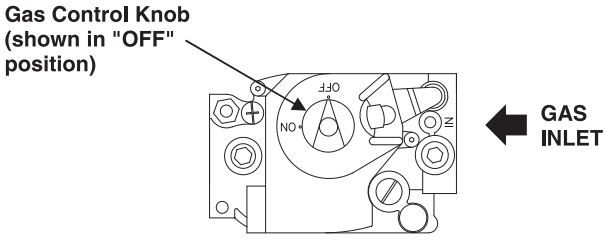

5. If the gas valve is not visible, remove control access panel.
6. If the gas control knob is not in the "OFF" position, turn the knob clockwise ↻ to "OFF".
7. Wait five (5) minutes to clear out any gas. Then smell for gas, including near the floor. If you smell gas, STOP! Follow "B" in the safety information above on this label. If you don't smell gas, go to the next step.
8. Turn the gas control knob counterclockwise ↺ to "ON".
9. Replace control access panel, if applicable.
10. Turn on all electrical power to the appliance.
11. Set thermostat or operating control to desired setting.
12. If the appliance will not operate, follow the instructions "To Turn Off Gas To Appliance" and call your service technician or gas supplier.

TO TURN OFF GAS TO APPLIANCE

1. Set the thermostat or operating control to lowest setting.
2. Turn off all electric power to the appliance if service is to be performed.
3. If the gas valve is not visible, remove the control access panel.
4. Turn the gas control knob clockwise ↻ to "OFF".
5. Replace control access panel, if applicable.

HSP VR8204/VR8304 9181R REV 2 (MM/YY)

Figure 3: Operating Instructions, Spark Ignition
63-03 thru 64-08 Natural Gas & LP Gas, 64-09 thru 64-12 LP Gas

POUR VOTRE SÉCURITÉ, LISEZ AVANT L'ALLUMAGE

MISE EN GARDE: Négliger de suivre ces instructions à la lettre pourrait provoquer un incendie ou une explosion causant des dégâts matériels, des blessures ou la mort.

A. Cet appareil est muni d'un dispositif d'allumage automatique de la veilleuse. Ne tentez pas d'allumer la veilleuse à la main.

B. AVANT DE METTRE EN MARCHE, sentez autour de l'appareil pour détecter toute odeur de gaz. Étant donné que certains gaz sont plus lourds que l'air et se déposent sur le sol, s'assurer de bien sentir près du plancher.

QUE FAIRE SI VOUS DÉTECTEZ UNE ODEUR DE GAZ

- Ne pas tenter d'allumer l'appareil
- Ne toucher à aucun interrupteur électrique; n'utiliser aucun appareil téléphonique dans l'immeuble.
- Contactez immédiatement votre fournisseur de gaz à partir du téléphone d'un voisin. Suivre les instructions données par votre fournisseur de gaz.
- S'il est impossible de rejoindre le fournisseur de gaz, appeler le service des incendies.

C. N'utilisez que votre main pour appuyer ou tourner le bouton de commande du gaz. Ne jamais utiliser d'outils. S'il est impossible d'enfoncer ou de tourner le bouton à la main, ne tentez pas de le réparer. Appelez un technicien d'entretien qualifié. Une force excessive ou une tentative de réparation peut provoquer un incendie ou une explosion.

D. N' utilisez pas cet appareil ni aucune de ses pièces si elles ont été immergées. Contactez immédiatement un technicien d'entretien qualifié pour inspecter l'appareil et remplacer toute pièce du système de régulation du débit gazeux et toute commande de gaz ayant été immergée.

DIRECTIVES DE FONCTIONNEMENT

1. ARRÊTEZ! Lisez les consignes de sécurité plus haut sur cette étiquette.
2. Réglez le thermostat ou l'appareil de réglage au niveau le plus bas.
3. Coupez toute l'alimentation électrique de l'appareil.
4. Cet appareil est muni d'un dispositif d'allumage automatique de veilleuse. Ne tentez pas d'allumer la veilleuse à la main.

Bouton de contrôle du débit (illustré en position d'arrêt « OFF »)

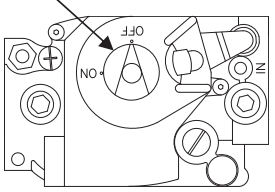

ARRIVÉE DE GAZ

5. Si la soupage d'alimentation en gaz n'est pas visible, retirez le panneau d'accès.
6. Si le bouton de commande du gaz n'est pas en position « OFF », tournez le bouton dans le sens des aiguilles d'une montre ↻ pour les mettre à « OFF ».
7. Attendre cinq (5) minutes pour que tout le gaz présent puisse s'échapper. Sentir autour de l'appareil pour détecter toute odeur de gaz, incluant près du sol. Si vous sentez une odeur de gaz. ARRÊTEZ! Suivez les consignes de sécurité apparaissant en « B » plus haut sur cette étiquette. Si vous ne détectez aucune odeur de gaz, passez à l'étape suivante.
8. Tournez le bouton de commande dans le sens contraire des aiguilles d'une montre ↺ pour le mettre en position de marche « ON ».
9. Replacez le panneau d'accès du régulateur de débit, le cas échéant.
10. Remettez en marche toute l'alimentation électrique de l'appareil.
11. Réglez le thermostat ou l'appareil de réglage au niveau désiré.
12. Si l'appareil ne se met pas en marche, suivez les instructions ci-dessous : « Couper l'alimentation en gaz de l'appareil » et appelez votre technicien d'entretien ou fournisseur de gaz.

COUPER L'ALIMENTATION EN GAZ DE L'APPAREIL

1. Réglez le thermostat ou l'appareil de réglage au niveau le plus bas.
2. Si des travaux d'entretien doivent être effectués, couper toute l'alimentation électrique de l'appareil.
3. Si la soupape d'alimentation en gaz n'est pas visible, retirez le panneau d'accès.
4. Tournez le bouton de commande dans le sens des aiguilles d'une montre ↻ pour les mettre en position d'arrêt « OFF ».
5. Replacez le panneau d'accès du régulateur de débit, le cas échéant.

HSP VR8204/VR8304 9414 REV 0 (MM/AA)

Figure 4: Operating Instructions, Spark Ignition
63-03 thru 64-08 Natural Gas & LP Gas, 64-09 thru 64-12 LP Gas

FOR YOUR SAFETY READ BEFORE LIGHTING

WARNING: If you do not follow these instructions exactly, a fire or explosion may result causing property damage, personal injury, or loss of life.

A. This appliance is equipped with an ignition device which automatically lights the pilot. Do not try to light the pilot by hand.

B. BEFORE OPERATING smell all around the appliance area for gas. Be sure to smell next to the floor because some gas is heavier than air and will settle on the floor.

WHAT TO DO IF YOU SMELL GAS

- **Do not try to light any appliance**
- **Do not touch any electric switch; do not use any phone in your building.**
- **Immediately call your gas supplier from a neighbor's phone. Follow the gas supplier's instructions.**
- **If you cannot reach your gas supplier, call the fire department.**

C. Use only your hand to push in or turn the gas control knob. Never use tools. If the knob will not push in or turn by hand, don't try to repair it, call a qualified service technician. Force or attempted repair may result in a fire or explosion.

D. Do not use this appliance if any part has been under water. Immediately call a qualified service technician to inspect the appliance and to replace any part of the control system and any gas control which has been under water.

OPERATING INSTRUCTIONS

1. **STOP! Read the safety information above on this label.**
2. **Set the thermostat or operating control to lowest setting.**
3. **Turn off all electric power to the appliance.**
4. **This appliance is equipped with an ignition device which automatically lights the pilot. Do not try to light the pilot by hand.**

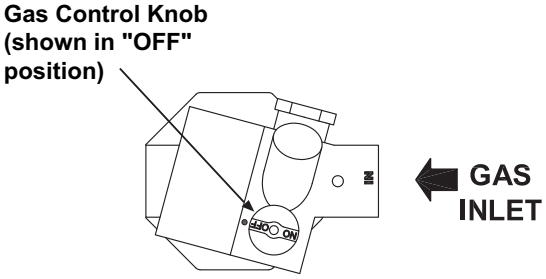

5. **If the gas valve is not visible, remove control access panel.**
6. **If the gas control knob is not in the "OFF" postion, turn the knob clockwise ↷ to "OFF".**
7. **Wait five (5) minutes to clear out any gas. Then smell for gas, including near the floor. If you smell gas, STOP! Follow "B" in the safety information above on this label. If you don't smell gas, go to the next step.**
8. **Turn the gas control knob counterclockwise ↶ to "ON".**
9. **Replace control access panel, if applicable.**
10. **Turn on all electrical power to the appliance.**
11. **Set thermostat or operating control to desired setting.**
12. **If the appliance will not operate, follow the instructions "To Turn Off Gas To Appliance" and call your service technician or gas supplier.**

TO TURN OFF GAS TO APPLIANCE

1. **Set the thermostat or operating control to lowest setting.**
2. **Turn off all electric power to the appliance if service is to be performed.**
3. **If the gas valve is not visible, remove the control access panel.**
4. **Turn the gas control knob clockwise ↷ to "OFF".**
5. **Replace control access panel, if applicable.**

SPRK 7000DERHC 9363R REV.0

Figure 5: Operating Instructions, Spark Ignition
64-09 thru 64-12 Natural Gas

User Maintenance

⚠ WARNING

Product Safety Information
Refractory Ceramic Fiber Product

This appliance contains materials made from refractory ceramic fibers (RCF). Airborne RCF fibers, when inhaled, have been classified by the International Agency for Research on Cancer (IARC), as a possible carcinogen to humans. After the RCF materials have been exposed to temperatures above 1800°F, they can change into crystalline silica, which has been classified by the IARC as carcinogenic to humans. If particles become airborne during service or repair, inhalation of these particles may be hazardous to your health.

Avoid Breathing Fiber Particulates and Dust

Suppliers of RCF recommend the following precautions be taken when handling these materials:

Precautionary Measures:
Provide adequate ventilation.
Wear a NIOSH/MSHA approved respirator.
Wear long sleeved, loose fitting clothing and gloves to prevent skin contact.
Wear eye goggles.
Minimize airborne dust prior to handling and removal by water misting the material and avoiding unnecessary disturbance of materials.
Wash work clothes separately from others. Rinse washer thoroughly after use.
Discard RCF materials by sealing in an airtight plastic bag.

First Aid Procedures:
Inhalation: If breathing difficulty or irritation occurs, move to a location with fresh clean air. Seek immediate medical attention if symptoms persist.
Skin Contact: Wash affected area gently with a mild soap and warm water. Seek immediate medical attention if irritation persists.
Eye Contact: Flush eyes with water for 15 minutes while holding eyelids apart. Do not rub eyes. Seek immediate medical attention if irritation persists.
Ingestion: Drink 1 to 2 glasses of water. Do not induce vomiting. Seek immediate medical attention.

⚠ WARNING

Service on this boiler should be undertaken only by trained and skilled personnel from a qualified service agency. Inspections should be performed at intervals specified in the Installation, Operation and Maintenance Manual and this User's Information Manual. Maintain manuals in a legible condition.

Keep boiler area clear and free of combustible materials, gasoline and other flammable vapors and liquids.

Do not place any obstructions in boiler room that will hinder flow of combustion and ventilation air.

A. General Housekeeping (Continuous).

1. Keep boiler area clear and free of combustible materials and obstructions to the free flow of combustion and ventilation air to the boiler.
2. Do not store or use gasoline or other flammable vapors or liquids in the vicinity of the boiler or any other appliance.
3. Do not store or use sources of hydrocarbons in the vicinity of the boiler. Sources of hydrocarbons include bleaches, cleaners, chemicals, sprays, paint removers, fabric softeners and refrigerants.
4. Check safety relief valve for water leakage. If leakage exists, contact a qualified service agency.

B. Inspect Vent System (Monthly).

1. The vent pipe must be continuous to chimney with no separations, obstructions, or sags. Vent pipe must be supported at minimum 4 foot intervals and secured with sheet metal screws.
2. The vent system must not have signs of continuous wetness. If signs of continuous wetness are observed, contact a qualified service agency.
3. The vent system must not have signs of deterioration from corrosion or other sources. If there is evidence of deterioration contact a qualified service agency.

C. Inspect Pilot and Main Burner Flames (Monthly).

1. Remove front jacket panel by lifting and pulling out.
2. Adjust thermostat to highest setting. Verify operation follows Sequence of Operation (see page 3).
3. View flames through observation port. See Figure 1.
4. Check pilot flame. See Figure 6. The pilot flame should be medium blue covering approximately 3/8" to 1/2" of the thermocouple. If the flame is yellow and lazy, follow instructions TO TURN OFF GAS TO APPLIANCE (see Figures 3-5), and contact a qualified service agency.
5. Check main burner flames. See Figure 6. The flames should have clearly defined inner cones approximately 1-1/2" high and should have a very sharp blue color characteristic. If the flame is yellow and lazy, follow instructions TO TURN OFF GAS TO APPLIANCE (see Figures 3-5), and contact a qualified service agency.
6. Adjust thermostats to normal setting.
7. Install front jacket panel.

D. Controls (as required by control manufacturer)[1].

1. Safety Relief Valve. Conduct try lever test as outlined in manufacturer's instruction tag on the safety relief valve.
2. Low Water Cut-off (if used). Follow instructions provided by control manufacturer.

E. General Inspection and Maintenance (Annual). For continued safe operation a qualified service agency must provide a more detailed inspection of burners, heat exchanger and vent system, and provide maintenance as specified in the Installation, Operation and Maintenance Manual.

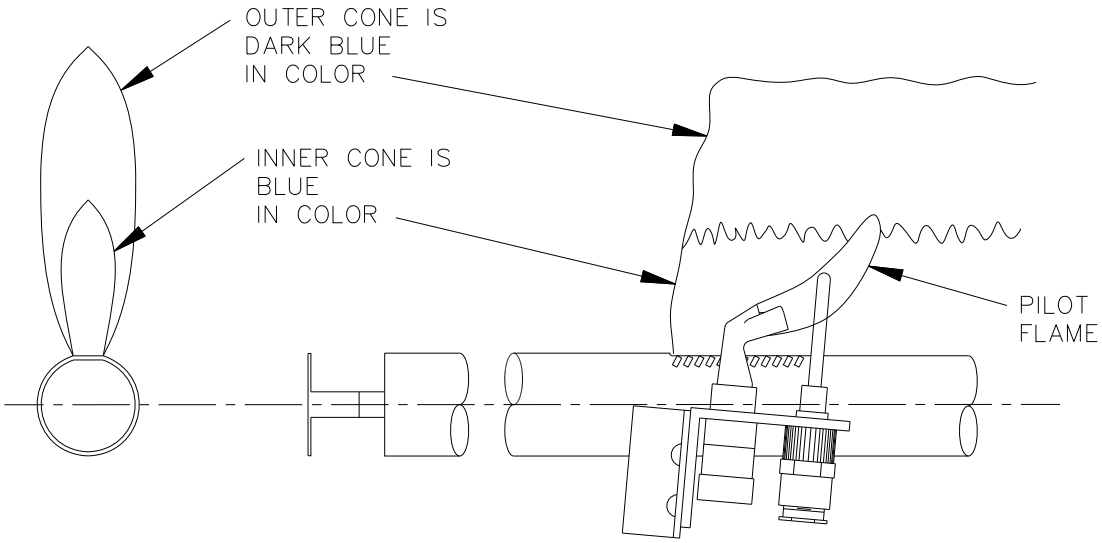

Figure 6: Pilot and Main Burner Flames

[1]Controls maintenance may be part of annual inspection and maintenance by a qualified service agency if annual frequency is specified by controls manufacturer.