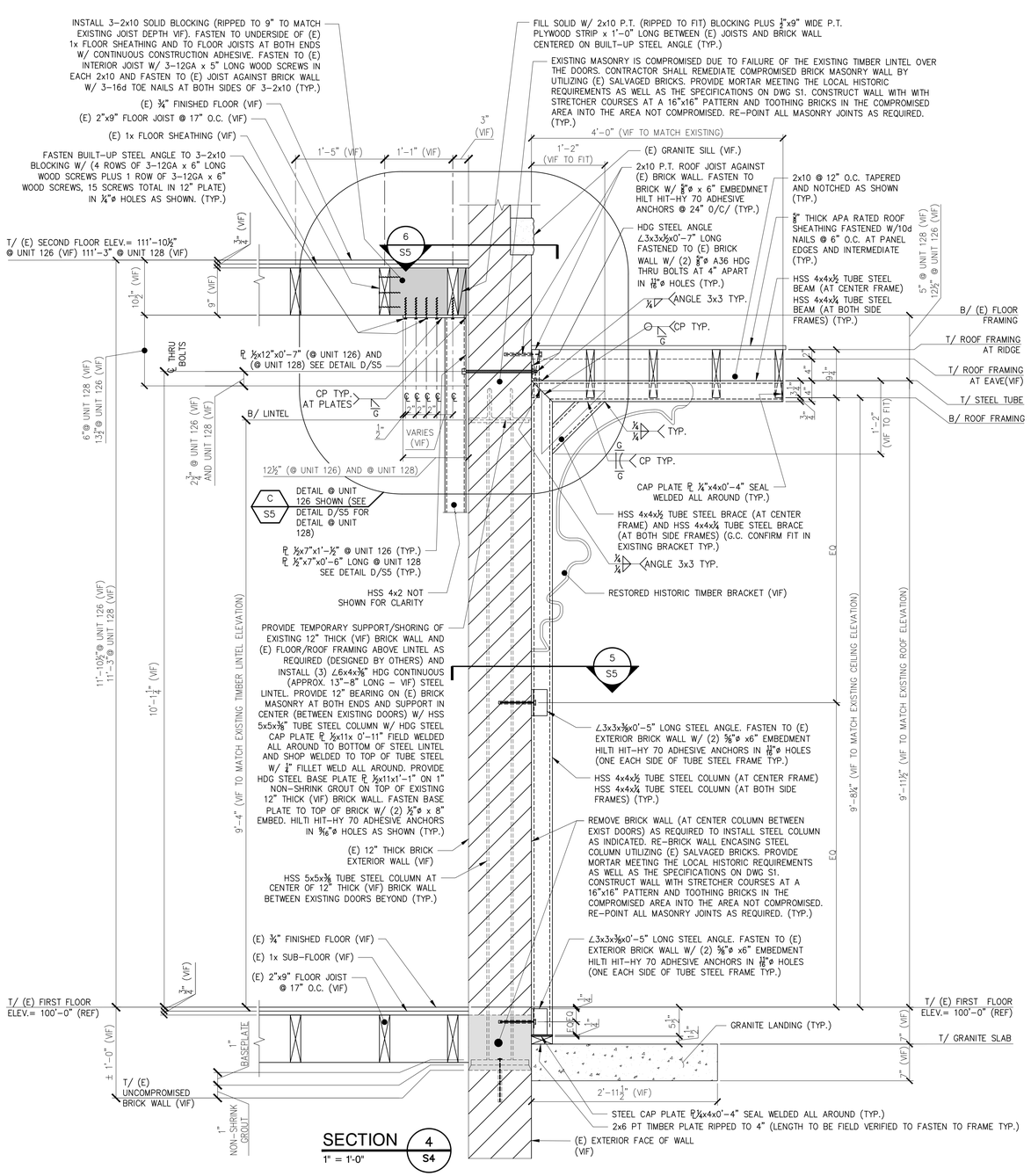


SECTION 4/S4
1" = 1'-0"

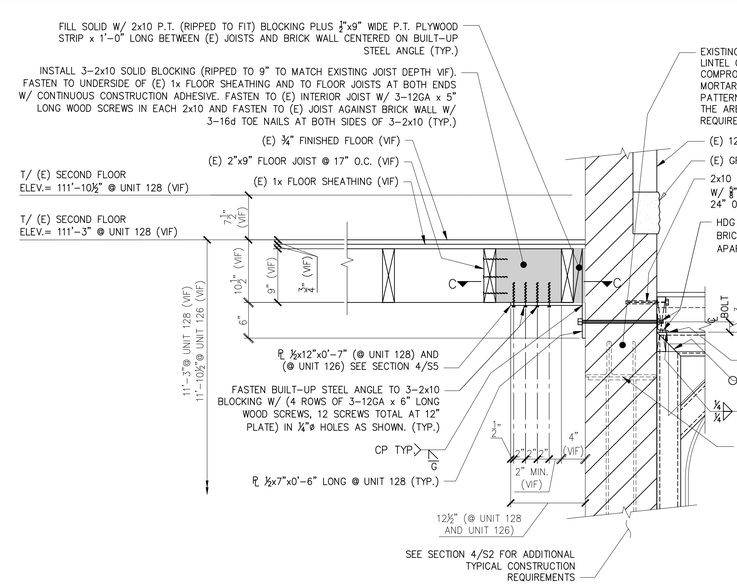


DETAIL D/S5 TYP. AT UNIT 128
1" = 1'-0"
(SEE SECTION 4/S5 FOR ADDITIONAL INFORMATION)

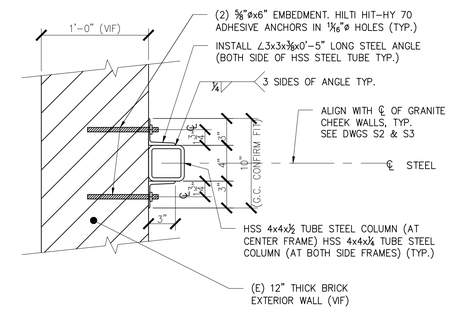


SECTION 5/S5
1 1/2" = 1'-0"

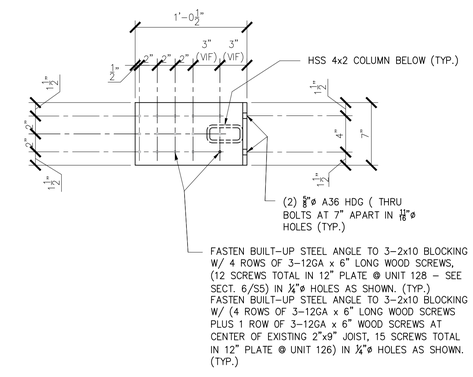


SECTION C–C
1 1/2" = 1'-0" (UNIT 128)

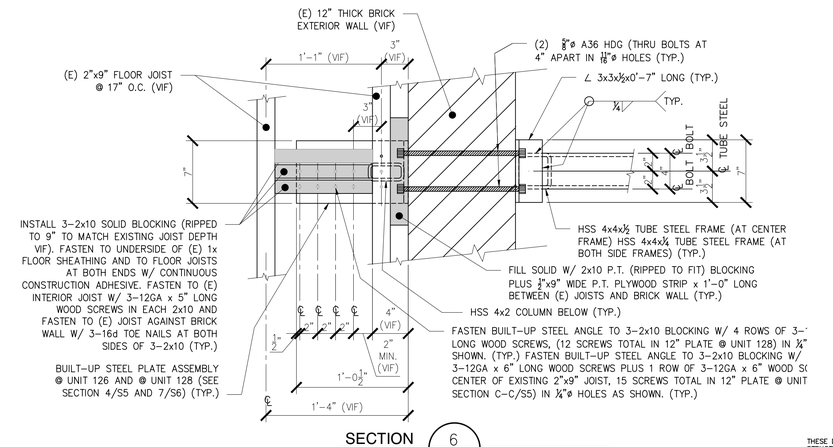


SECTION 6/S5
1 1/2" = 1'-0"
UNIT 126
(UNIT 128 SIM. SEE SECTION C–C/S5)

THESE DRAWINGS HAVE BEEN DEVELOPED BY L&L STRUCTURAL ENGINEERING SERVICES, INC. FOR THE TITLED SET ONLY. THE DRAWINGS ARE THE SOLE PROPERTY OF L&L ENGINEERING SERVICES, INC. AND THEY SHALL NOT BE USED, LENT, COPIED OR ALTERED WITHOUT THE WRITTEN CONSENT OF L&L STRUCTURAL ENGINEERING SERVICES, INC.

L & L STRUCTURAL
ENGINEERING SERVICES, INC.
SIX Q STREET
SOUTH PORTLAND, MAINE 04106
PHONE: (207) 767–4830
FAX: (207) 799–5432

JOSEPH H. LEASURE 6242 REGISTERED

| rev. | date | description | appr'd |
|---|---|---|---|
| 0 | 01/25/18 | FOR CONSTRUCTION | JHL |
| 1 | 02/02/18 | GENERAL REVISIONS | JHL |

designed by: JHL
drawn by: JH
checked by: JHL
scale: AS NOTED
date: 11/30/2016
plot date: 01/25/2018
project # 27113B

Reviewed for Code Compliance Inspections Division Approved as Noted
Date: 02/27/18

# BUILDING LOCATED AT
126/128 DANFORTH STREET
PORTLAND, MAINE

FRONT ENTRY ROOF/DECK REPAIR
SECTIONS AND DETAILS

S5