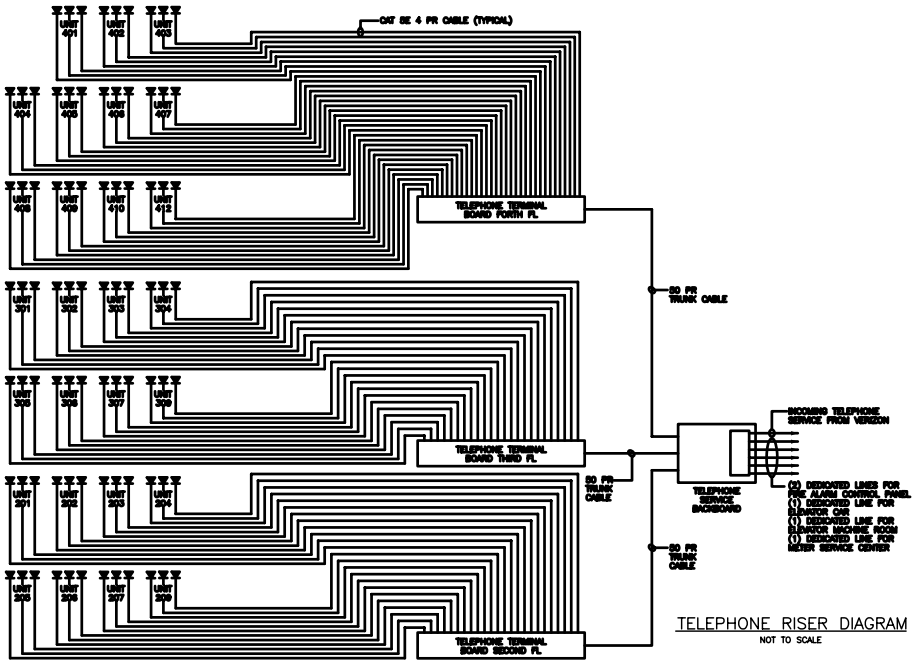

TELEPHONE RISER DIAGRAM

NOT TO SCALE

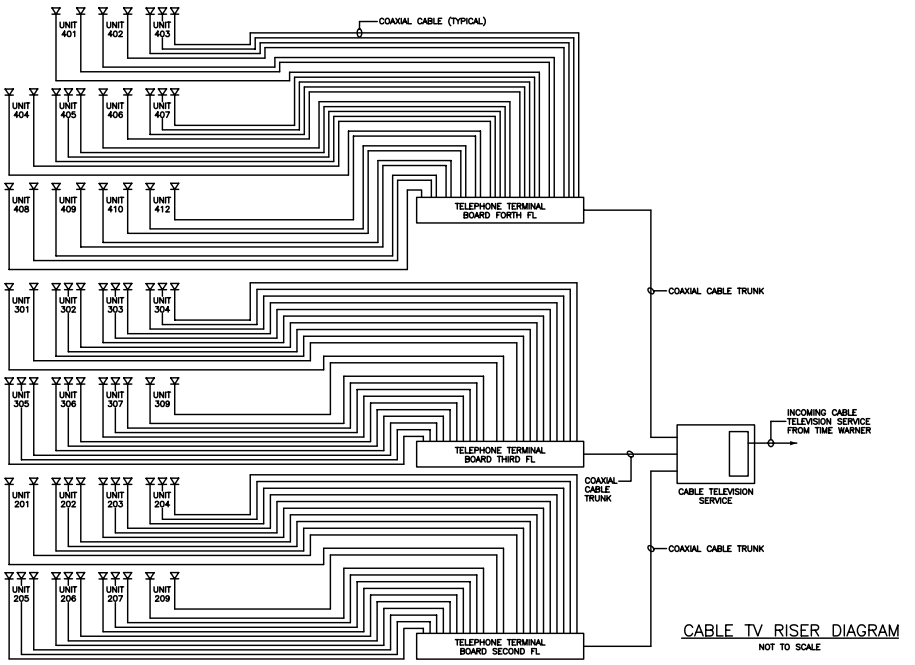

CABLE TV RISER DIAGRAM

NOT TO SCALE

TYPICAL UNIT FIRE ALARM RISER

NOT TO SCALE

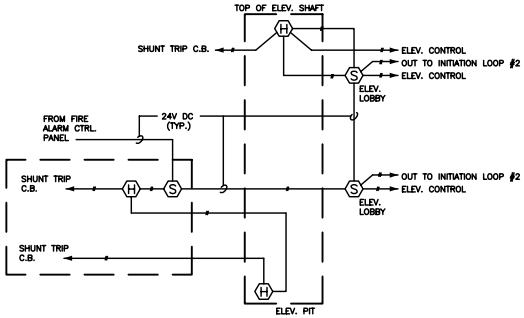

INSTALL DETECTORS AND WIRING IN CONFORMANCE WITH STATE ELEVATOR CODE.

ELEVATOR RECALL FIRE ALARM INTERFACE WIRING DIAGRAM

NOT TO SCALE

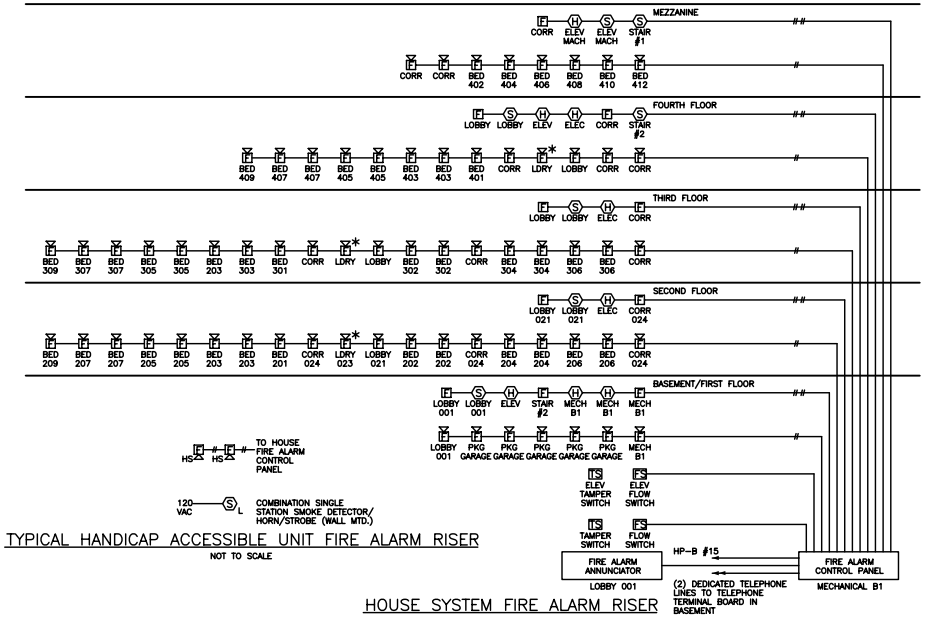

TYPICAL HANDICAP ACCESSIBLE UNIT FIRE ALARM RISER

NOT TO SCALE

HOUSE SYSTEM FIRE ALARM RISER

NOT TO SCALE

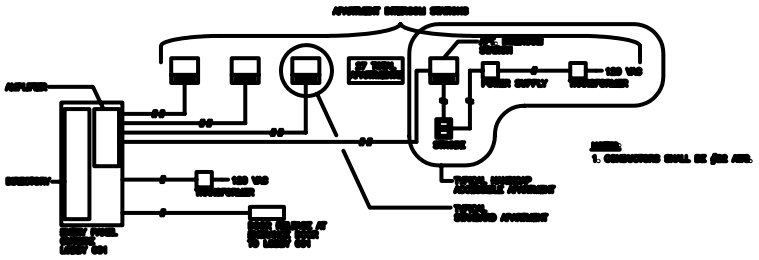

DOOR INTERCOM SYSTEM WIRING DIAGRAM

NOT TO SCALE

Developer:
MAINE WORKFORCE HOUSING, LLC

ARCHETYPE, P.A.
ARCHITECTS
48 Union Wharf Portland, Maine 04101
(207) 772-6022 Fax (207) 772-4056

Project:
CASCO TERRACE
41 STATE STREET,
PORTLAND, MAINE

May 27, 2003

NOT TO SCALE

Revisions

ELECTRICAL DETAILS

E5

06/04/2003 09:54:16 AM