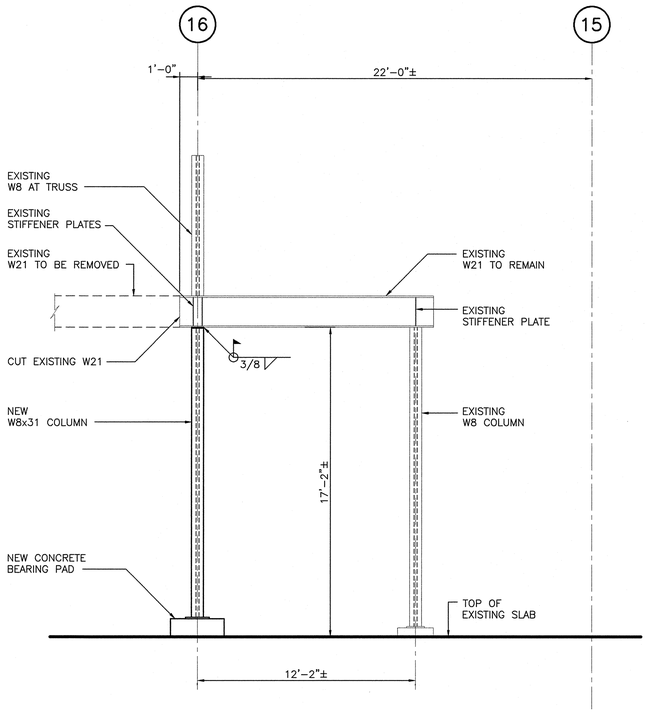

E1 ELEVATION AT NEW COLUMN
SCALE: 1/4" = 1'-0"

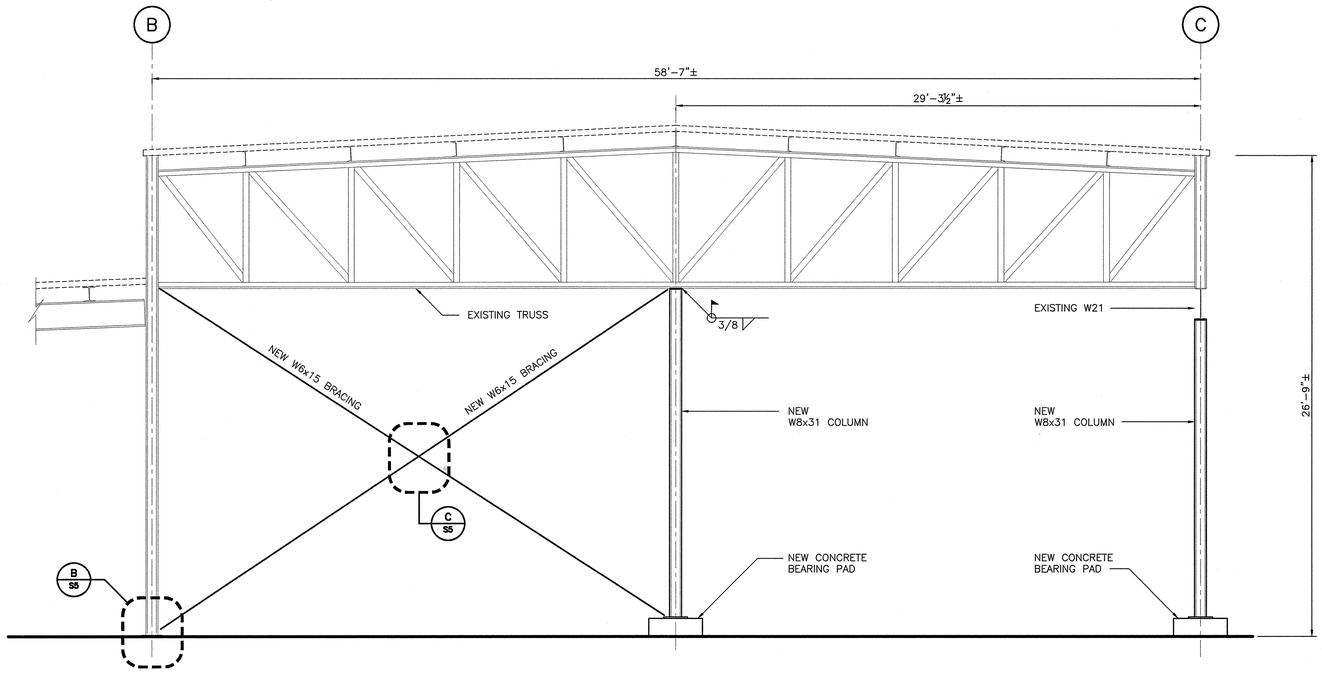

E2 ELEVATION AT NEW COLUMNS
SCALE: 1/4" = 1'-0" (COLUMN LINE 16)

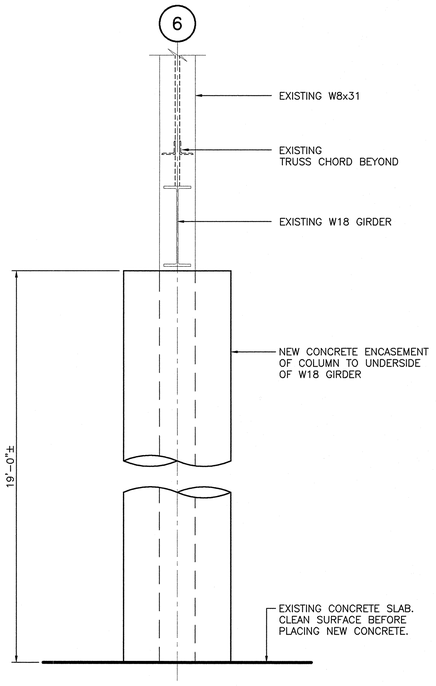

C1 SECTION
SCALE: 3/4" = 1'-0"

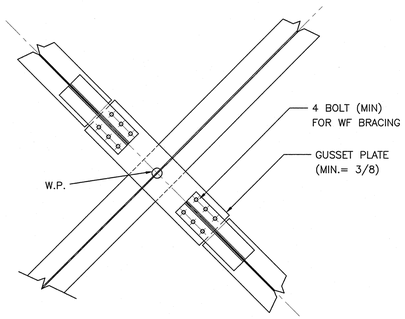

C VERTICAL BRACING CONNECTION
SCALE: 3/4" = 1'-0"

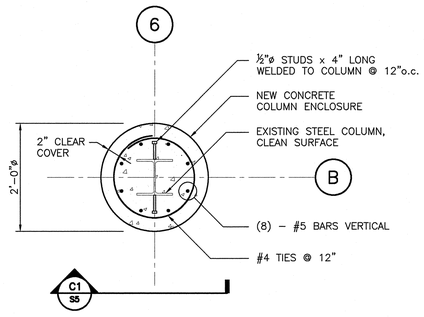

A DETAIL
SCALE: 3/4" = 1'-0"

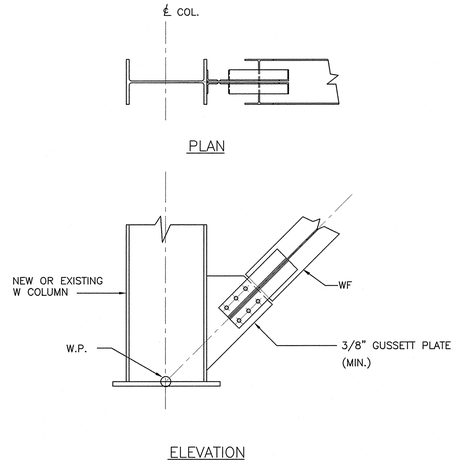

B VERTICAL BRACING CONNECTION
SCALE: 3/4" = 1'-0"

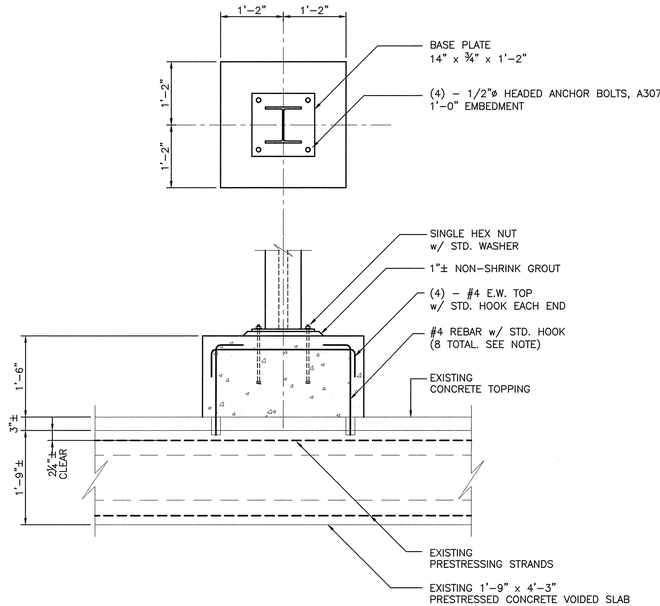

NOTE:
DRILL AND GROUT #4 REBAR INTO EXISTING CONCRETE DECK w/ HILTI HY150 ADHESIVE GROUT, 4" EMBEDMENT.
USE CAUTION TO AVOID DAMAGING EXISTING PRESTRESSING STRANDS.

TYPICAL NEW COLUMN BASE DETAIL
SCALE: 3/4" = 1'-0"

BID ISSUE – NOVEMBER 19, 2004

MARK	DATE	DESCRIPTION	BY	APP'D

STATE OF MAINE
JITENDRA C. SHAH
No. 9527
PROFESSIONAL ENGINEER

Maguire Group Inc.
Architects / Engineers / Planners
400 Commercial Street
Portland, Maine 04101

PARTIAL DEMOLITION
OF INTERNATIONAL MARINE TERMINAL
COMMERCIAL STREET – PORTLAND, MAINE

STRUCTURAL
ELEVATIONS & DETAILS

PROJECT NO.:	17181
DESIGNED BY:	S.P.B.
DRAWN BY:	K.C.
CHK'D BY:	
DATE:	11/19/04
SCALE:	AS NOTED
SHEET NO.:	S5

SHEET 7 OF 8

REVIEWED BY: CIVIL: INITIAL&DATE ARCH: INITIAL&DATE STRU: INITIAL&DATE PLUM: INITIAL&DATE FIRE: INITIAL&DATE MECH: INITIAL&DATE ELEC: INITIAL&DATE

DRAWING FILE: N:\Projects\17181\ACAD\STRU\17181FS001.dwg PLOTTED: Nov 16,2004-8:57am BY: KChan