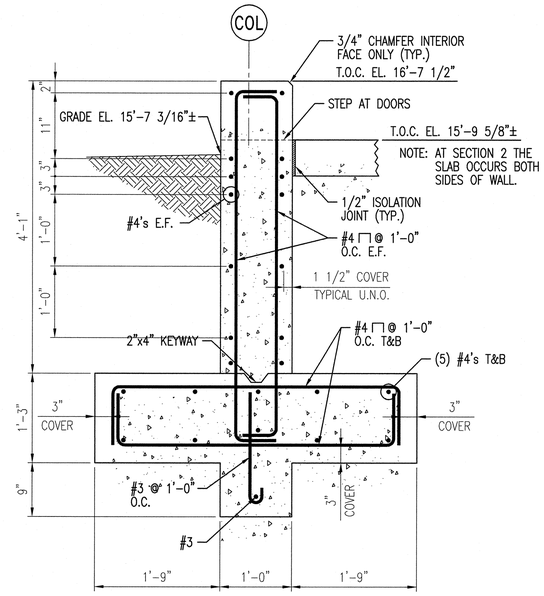

SECTION 1 / 25760-C-3003
SCALE: 1"=1'-0"
AS SHOWN

SECTION 2 / 25760-C-3003
SCALE: 1"=1'-0"
AS NOTED

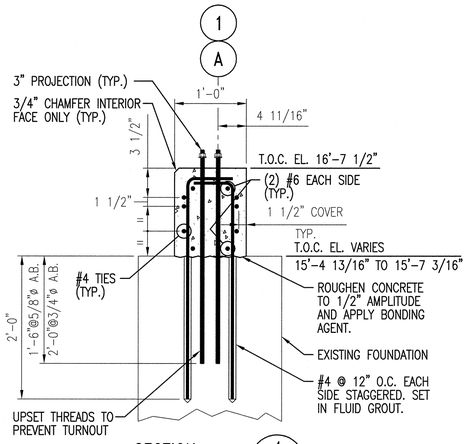

SECTION 4 / 25760-C-3003
SCALE: 1"=1'-0"

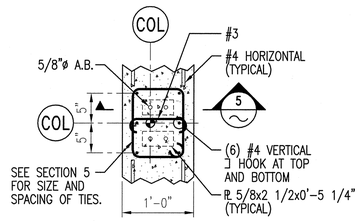

TYPICAL REINFORCING AND ANCHOR BOLT DETAIL AT 5/8"ø ANCHOR BOLTS
SCALE: 1"=1'-0"

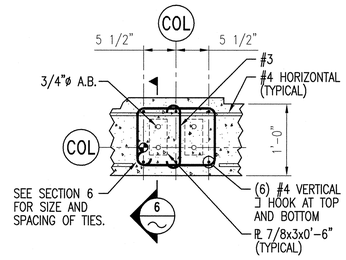

TYPICAL REINFORCING AND ANCHOR BOLT DETAIL AT 3/4"ø ANCHOR BOLTS
SCALE: 1"=1'-0"

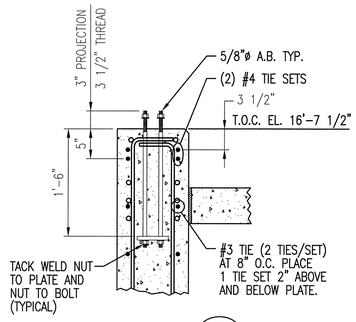

SECTION 5
SCALE: 1"=1'-0"

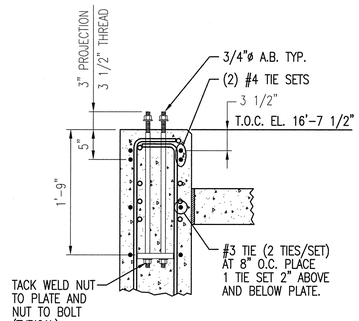

SECTION 6
SCALE: 1"=1'-0"

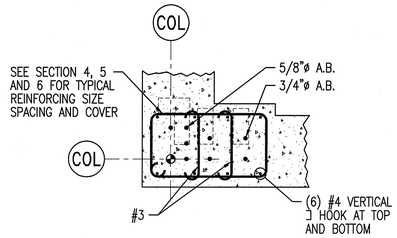

TYPICAL REINFORCING AND ANCHOR BOLT DETAIL AT 3/4"ø ANCHOR BOLTS
TYPICAL 4 CORNERS
SEE PLAN FOR ORIENTATION
SCALE: 1"=1'-0"

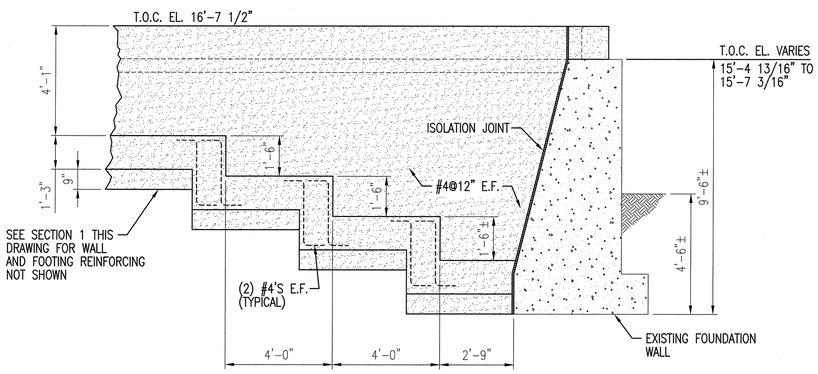

SECTION 3 / 25760-C-3003
SCALE: 3/8"=1'-0"

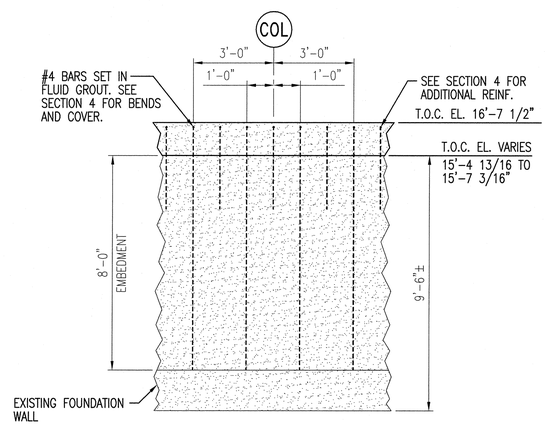

TYPICAL ELEVATION AT NEW COLUMNS ON EXISTING WALL
SCALE: 3/8"=1'-0"

■ PRELIMINARY – NOT FOR CONSTRUCTION
☐ APPROVED FOR CONSTRUCTION
☐ SUPERSEDES ALL PREVIOUS ISSUES

BY _____ DATE FEB 24/05

REFERENCE DRAWINGS

DWG. NO.	TITLE	BY

NOTE:

1. SEE DRAWING 25760-C-3001 FOR GENERAL NOTES.

Released For Bid
Date: FEB. 24, 2005

PRELIMINARY NOT FOR CONSTRUCTION
FEB. 24, 2005

REV.	ISSUED TO	ISSUED FOR
A	CLIENT	PERMITTING AND BID

THIS DRAWING IS THE PROPERTY OF NEILL AND GUNTER INCORPORATED AND IS TO BE USED ONLY FOR THE SPECIFIC PROJECT IDENTIFIED ON THE DRAWING. NO REVISIONS SHALL BE MADE WITHOUT THE EXPRESSED WRITTEN CONSENT OF NEILL AND GUNTER INCORPORATED.

NO.	DATE	BY	REVISIONS	CKD.

STATE OF MAINE R. HARRY DUVE 4316 REGISTERED PROFESSIONAL ENGINEER FEB 24 05

DESIGNED RHO	DRAWN SWM
CHECKED DESIGN / DFTG.	DATE 2/24/05
	SCALE 1"=1'
APPROVED	SPEC.
PROJ. ENG.	

CAD 25760S003

Neill and Gunter

CITY OF PORTLAND
PORTLAND INTERNATIONAL MARINE TERMINAL
PORTLAND, MAINE

RUBB BUILDING

FOUNDATION SECTIONS AND DETAILS

JOB NO. 25760 | DWG. NO. 25760-C-3004 | REV. A