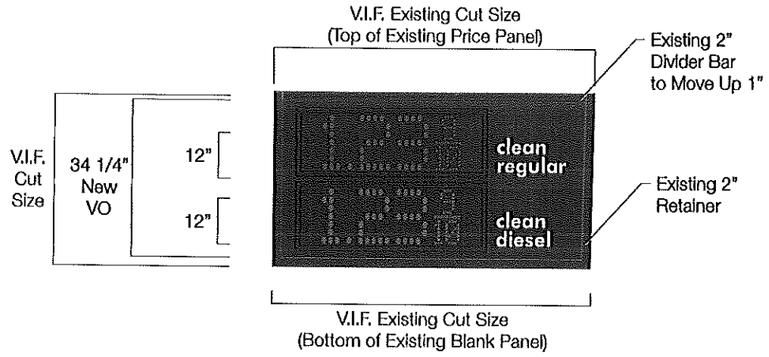

(A) Sign Elevation
Scale: 3/8"=1'-0"

Specifications

Qty = 2 (1 for each side)

New Price Changer Face for Existing Double Face Internally Illuminated Pylon Sign

*Remove (2) existing divider bars between existing price panel & blank panel
*Move (2) existing divider bars up 1" (between existing price panel & Circle K panel); trim existing Circle K faces in field as required

- Flat white "Mustang" Co-Polyester faces
- Translucent vinyl graphics

LED Gas Price Changers (Customer Supplied)
- Cut hole in Co-polyester for LED Price Changer Unit (see detail B)
- Price Changer "LED" - 2 red sets & 2 green sets with remote control

Units are 2 ½" deep

Colors & Materials

3M VT-12138 translucent vinyl
No Alternative

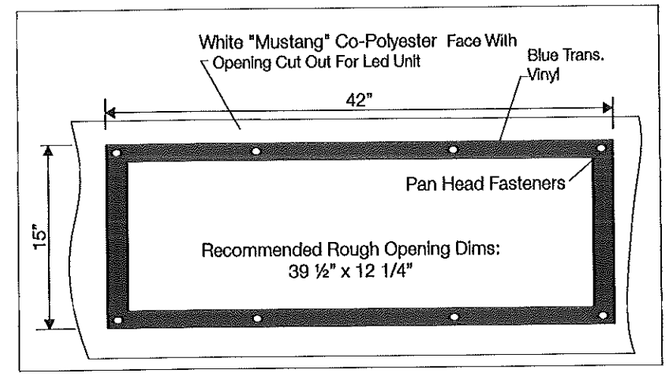

(B) LED Price Changer Attachment Details
Scale: 1"=1'-0"

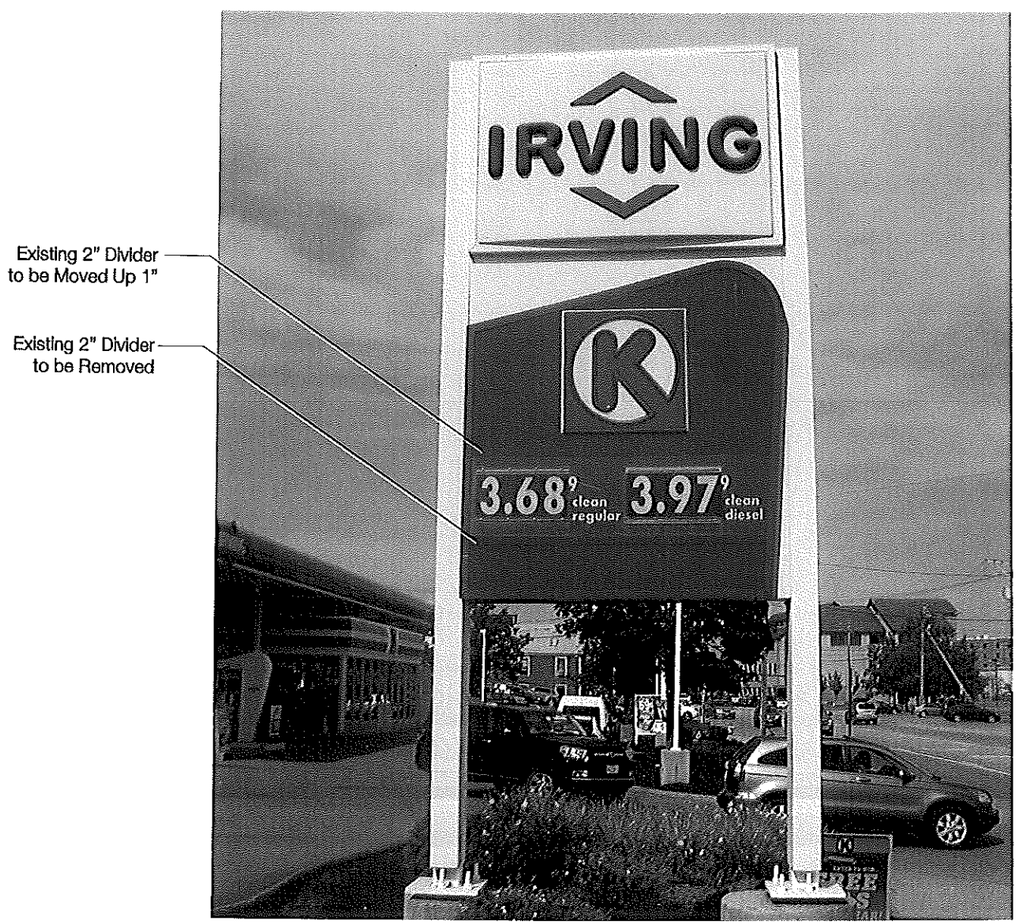

(C) Existing
Not to Scale

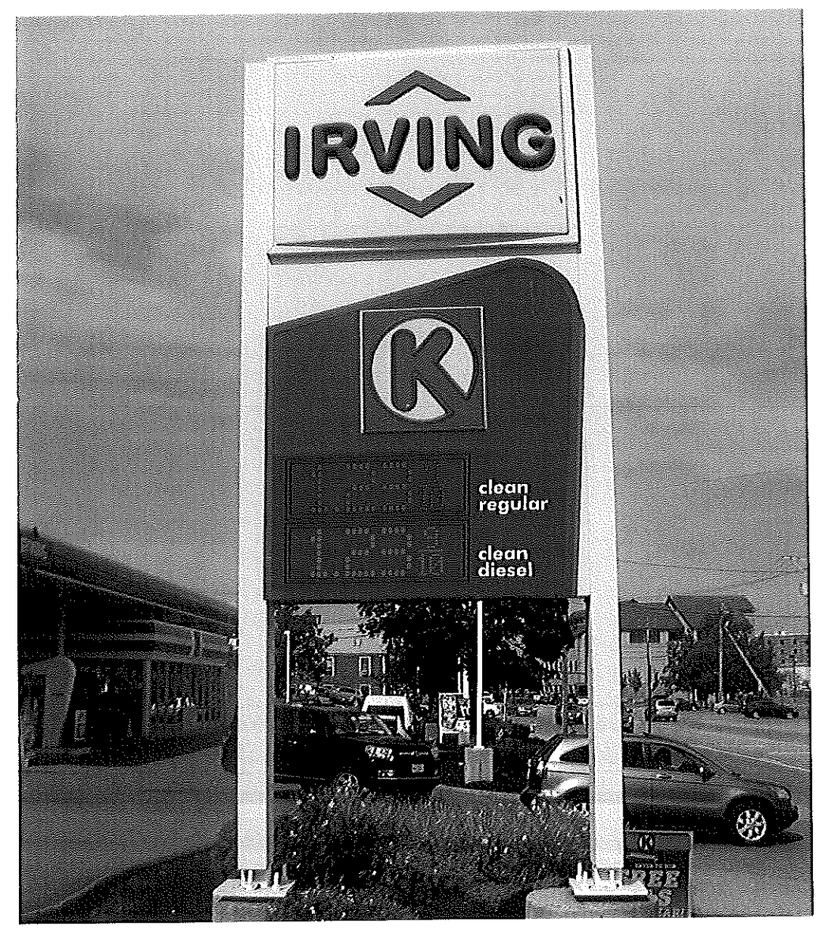

(D) Proposed
Not to Scale

Reviewed for Code Compliance
Inspections Division
Approved with Conditions

125
N
800.5

Date: 10/15/14

IRVING

393 Commercial St
South Portland, ME

Project: 8770
Irving Oil Corporation

Sales: Gary Bolduc
Date: 08.29.13
Designer: ST

Note:
This is an original unpublished drawing created by Poyant Signs, Inc. It is submitted for your personal use in connection with a project being planned for you by Poyant Signs, Inc. It is not to be shown to anyone outside your organization, nor is it to be reproduced, copied or exhibited in any fashion until transferred.

Revisions:

Approved By:

Date:

Pylon Sign Refurbish

Option A

Sign Type 8770.1A

1A.1