001 TYPICAL DISPENSER CONDUIT LAYOUT – PLAN

SCALE: 3/4" = 1'-0"

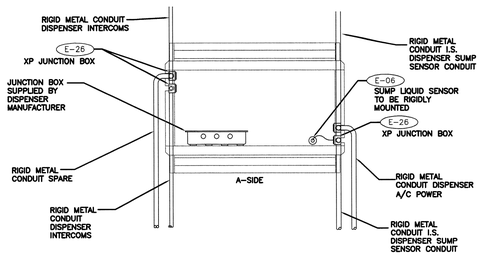

002 TYPICAL DISPENSER CONDUIT LAYOUT – ELEVATION

SCALE: 3/4" = 1'-0"

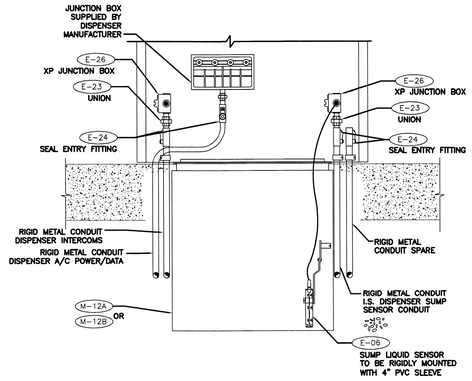

003 TYPICAL DISPENSER CONDUIT LAYOUT – SIDE

SCALE: 3/4" = 1'-0"

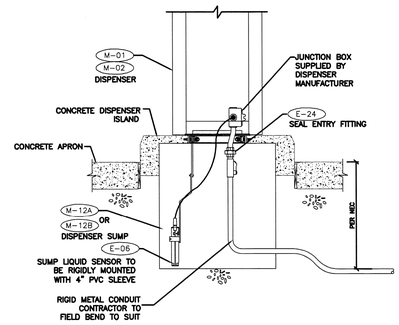

004 PROBE/SENSOR FIELD WIRING

SCALE: NTS

NOTE:
REFER TO VEEDER ROOT INSTALLATION MANUAL FOR SPECIFIC FIELD WIRING INSTRUCTIONS.

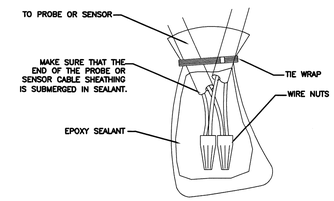

005 TYPICAL TANK SUMP DETAILS – PLAN

SCALE: 3/4" = 1'-0"

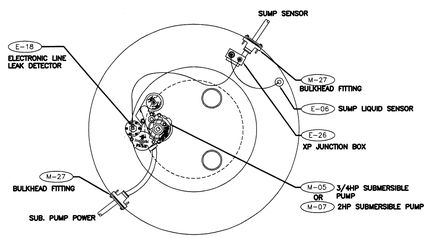

TANK SUMP LAYOUT WITH NO CONDUIT PASS THROUGH

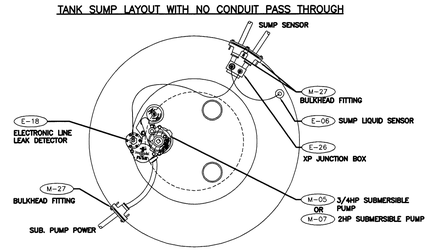

TANK SUMP LAYOUT WITH CONDUIT PASS THROUGH

006 TYPICAL TANK SUMP DETAILS – ELEVATION

SCALE: 3/4" = 1'-0"

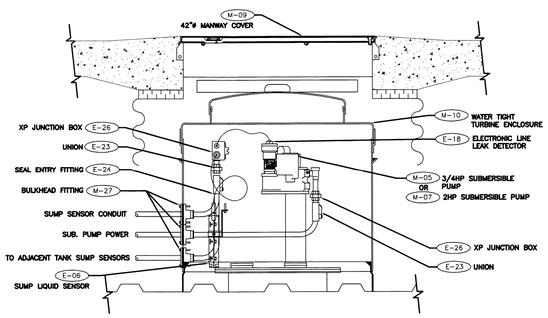

NOTE:
FOR REFERENCE ONLY. ACTUAL SITE INSTALLATION MAY VARY DUE TO INTERFERENCE WITH PIPING AND EXISTING SITE CONDITIONS.

007 UST HYDROSTATIC RESERVOIR SENSOR DETAIL

SCALE: 3/4" = 1'-0"

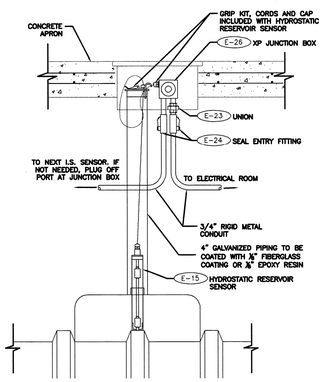

008 UST TANK LEVEL MONITOR DETAIL

SCALE: 3/4" = 1'-0"

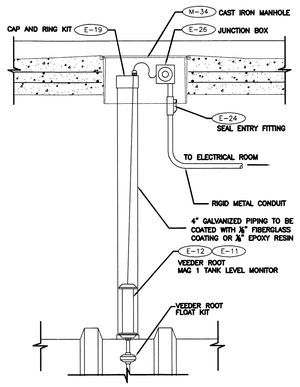

☐ SUPERSEDES ALL PREVIOUS ISSUES
☐ APPROVED FOR CONSTRUCTION
☐ PRELIMINARY–NOT FOR CONSTRUCTION
☐ ISSUED TO: _____

_____ DATE _____

REV	DATE	BY	REVISION

REVISIONS

MHF Design Consultants, Inc.
44 Stiles Road, Suite One
Salem, New Hampshire 03079
(603) 893-0720
ENGINEERS • PLANNERS • SURVEYORS
www.mhfdesign.com

STATE OF MAINE
FRANK C. MONTEIRO
7201
LICENSED PROFESSIONAL ENGINEER
1/26/16

IRVING

DRAWN BY: DSA	DESIGNED BY: HS
SCALE: AS NOTED	APPROVED BY:
DATE: 1/26/16	PROPERTY NO.:
CAD FILE: 3880GE8.DWG PLOTTED:	REF-BLK: REF-BLK: REF-BLK:

IRVING OIL

190 COMMERCE WAY
PORTSMOUTH, NH 03801

PROJECT:

393 COMMERCIAL STREET
PORTLAND, MAINE

SHEET TITLE:

LEAK DETECTION DETAILS

PROJECT:	DRAWING NO:	REVISION:
	GE8	-

COMPANY SUPERVISOR AND CONTRACTOR TO VERIFY ALL MEASUREMENTS ON WORK OR AT SITE. THIS DRAWING IS THE PROPERTY OF IRVING OIL LTD. AND SHALL BE RETURNED ON COMPLETION OF WORK.

F:\Projects\CAD\388015\3880 GE8.dwg GE8 1/27/16 9:38am DSA

Copyright © 2016 by MHF Design Consultants, Inc. All Rights Reserved.