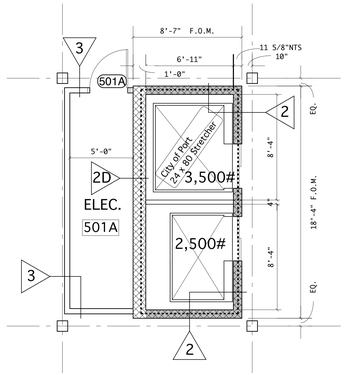

5TH FLOOR

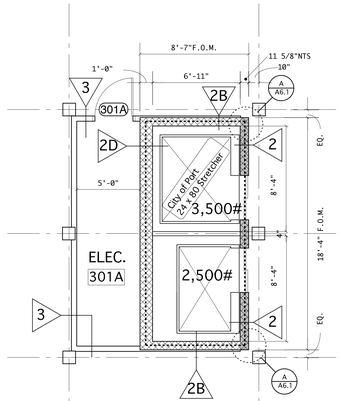

3RD FLOOR

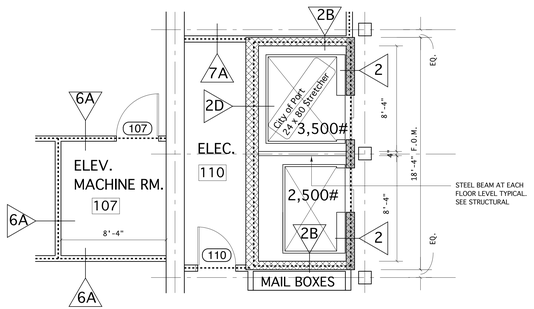

1ST FLOOR

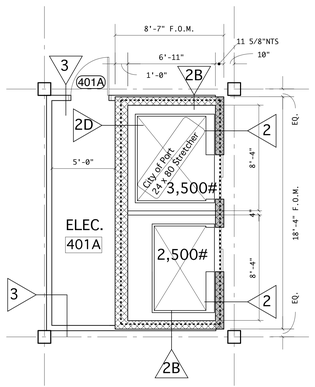

4TH FLOOR

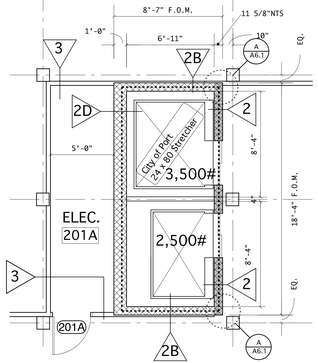

2ND FLOOR

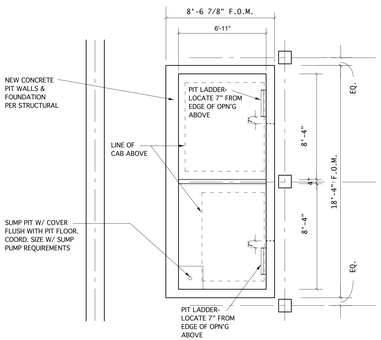

BASEMENT ELEVATOR PIT

GENERAL NOTES

1. ALL DIMENSIONS TO EXISTING CONDITIONS SHALL BE VERIFIED IN THE FIELD BY CONTRACTOR(S). THIS INCLUDES ALL HORIZONTAL AND VERTICAL DIMENSIONS AT COLUMNS AND WALLS AS WELL AS FLOOR-TO-FLOOR DIMENSIONS.
2. ALL STAIR AND ELEVATOR SHAFTS SHALL BE 2 HOUR RATED. SEE STRUCTURAL FOR REINFORCING REQUIREMENTS FOR NEW SHAFT WALLS AS WELL AS EXISTING EXTERIOR MASONRY WALLS.
3. 2500# ELEVATOR TO HAVE GUARD RAIL AT TOP OF CAB / REAR SIDE

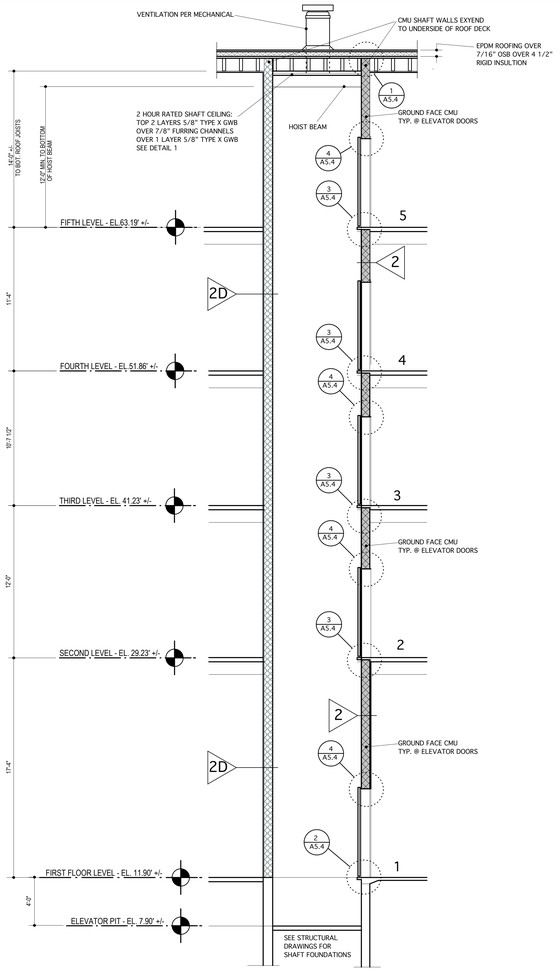

5 ELEVATOR HOISTWAY - SECTION
1/4" = 1'-0"

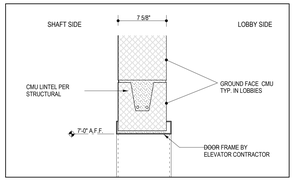

4 ELEVATORS - TYPICAL HEAD DETAIL
1 1/2" = 1' - 0"

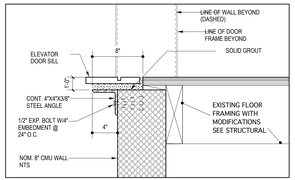

3 ELEVATORS - SILL DETAIL AT UPPER FLOORS
1 1/2" = 1' - 0"

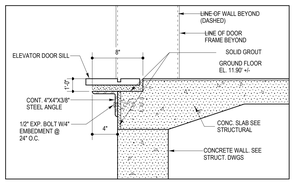

2 ELEVATORS - SILL DETAIL AT GROUND FLOOR
1 1/2" = 1' - 0"

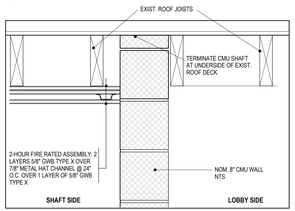

1 ELEVATORS - DETAIL AT TOP OF SHAFT
1 1/2" = 1' - 0"

PERMIT SET - NOT FOR CONSTRUCTION

REGISTERED ARCHITECT WINTON F. SCOTT, JR. No. 793 STATE OF MAINE

Blais Civil Engineers, PA
780 Broadway
South Portland, ME 04106
T. 207.767.7300
sblaise@blaisece.com

Bartlett Design
942 Washington Street
Bath, ME 04530
T. 207.443.5447 F. 207.443.5560
bartdes@blazenetme.net

Mechanical Systems Engineers
Royal River Center, Suite #10
10 Forest Falls Drive, Yarmouth, ME 04096
T. 207.846.1441 F. 207.846.1443

Carroll Associates Landscape Architects
217 Commercial Street, Suite 200
Portland, ME 04101
T. 207.772.1552 F. 207.0712

Becker Structural Engineers, Inc.
75 York Street, Portland, ME 04101
T. 207.879.1838 F. 207.879.1822
www.beckerstructural.com

Winton Scott Architects, PA
5 Milk Street, Portland, ME 04101
207.774.4811 www.wintonscott.com

REV #	DATE	DESCRIPTION

Renovations To:

CUMBERLAND COLD STORAGE BUILDING

Merrill's Wharf, Portland, Maine

ELEVATOR PLANS SECTIONS DETAILS

A5.4

9. 23. 2010