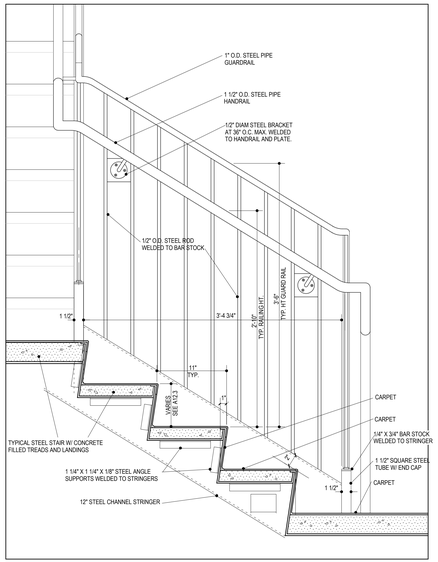

1 STAIR 2 - Section Details
3" = 1'-0"

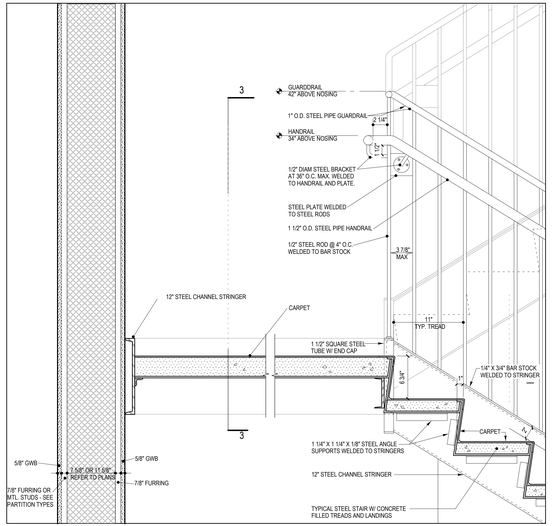

2 STAIR 1 - Section Detail
1 1/2" = 1'-0"

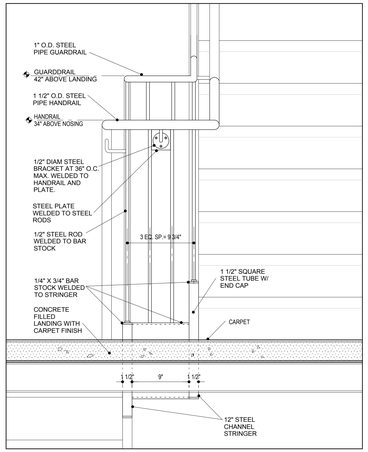

3 STAIR 1 - Section Detail
1 1/2" = 1'-0"

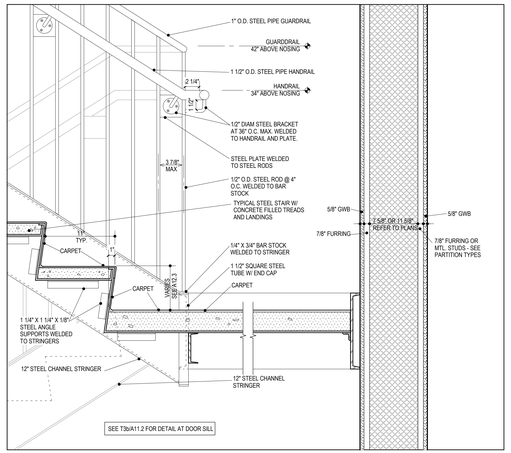

4 STAIR 1 & 2 - Section Details
1 1/2" = 1'-0"

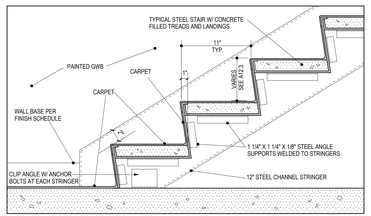

5 STAIR 1 & 2 - Section Details
1 1/2" = 1'-0"

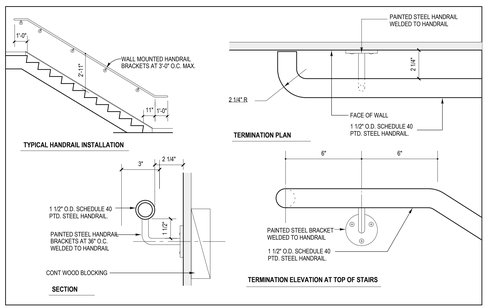

6 STAIR 1 & 2 - Wall Mounted Handrail Details
3" = 1'-0"

PERMIT SET - NOT FOR CONSTRUCTION

REGISTERED ARCHITECT WINTON F. SCOTT, JR. No. 793 STATE OF MAINE

Blais Civil Engineers, PA
780 Broadway
South Portland, ME 04106
T. 207.767.7300
sblaise@blaisece.com

Bartlett Design
942 Washington Street
Bath, ME 04530
T. 207.443.5447 F. 207.443.5560
bartdes@blazenetme.net

Mechanical Systems Engineers
Royal River Center, Unit #10
10 Forest Falls Drive, Yarmouth, ME 04096
T. 207.846.1441 F. 207.846.1443

Carroll Associates Landscape Architects
217 Commercial Street, Suite 200
Portland, ME 04101
T. 207.772.1552 F. 207.0712

Becker Structural Engineers, Inc.
75 York Street, Portland, ME 04101
T. 207.879.1838 F. 207.879.1822
www.beckerstructural.com

Winton Scott Architects, PA
5 Milk Street, Portland, ME 04101
207.774.4811 www.wintonscott.com

REV #	DATE	DESCRIPTION

Renovations To:

CUMBERLAND COLD STORAGE BUILDING

Merrill's Wharf, Portland, Maine

STAIR DETAILS

A5.3

9. 23. 2010