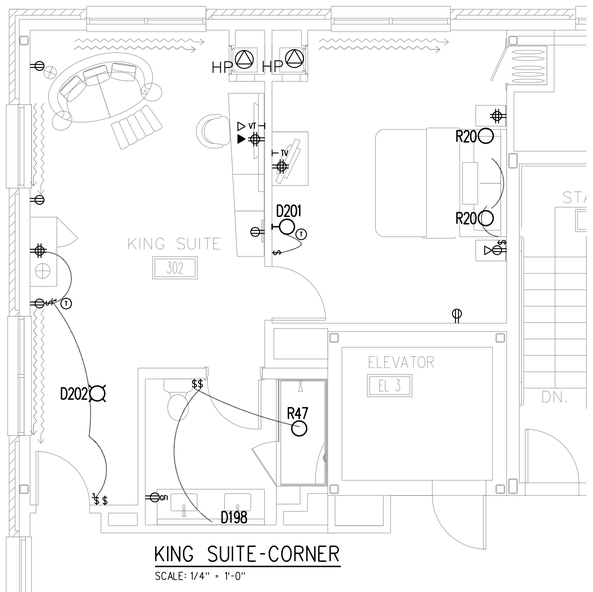

KING SUITE-CORNER
SCALE: 1/4" = 1'-0"

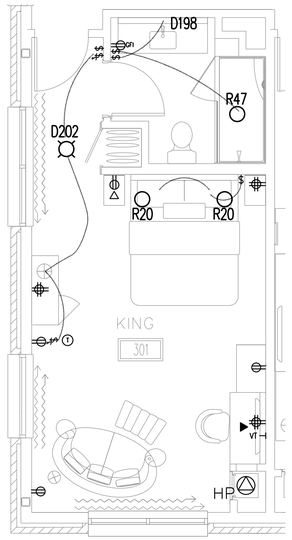

KING CORNER
SCALE: 1/4" = 1'-0"

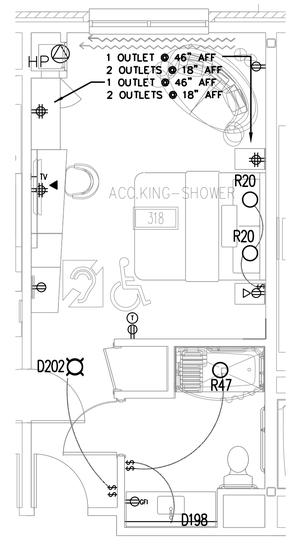

ACC. KING
SCALE: 1/4" = 1'-0"

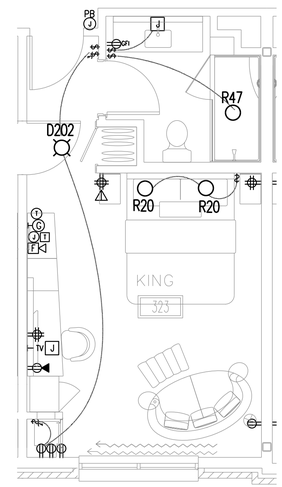

TYPICAL KING
SCALE: 1/4" = 1'-0"

GENERAL NOTE

1. REFER TO PANEL SCHEDULE DRAWINGS E16 THRU E.. FOR CIRCUITING INFORMATION.

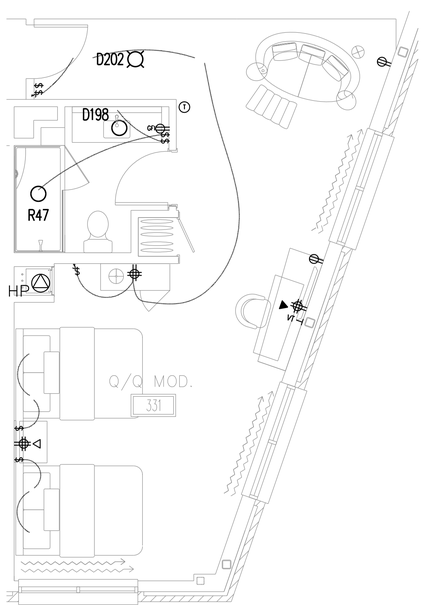

Q/Q MOD
SCALE: 1/4" = 1'-0"

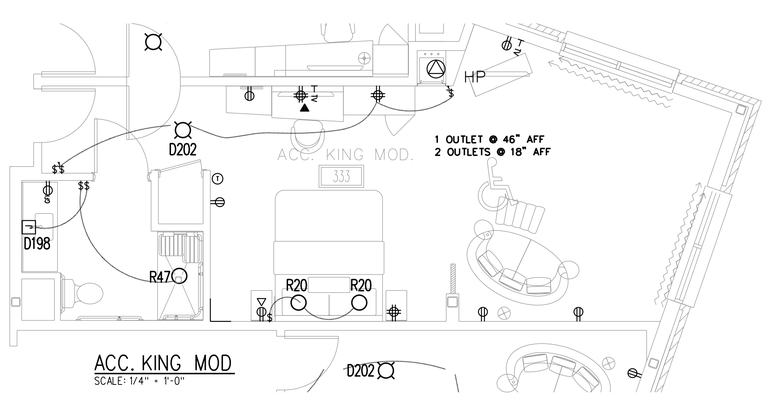

ACC. KING MOD
SCALE: 1/4" = 1'-0"

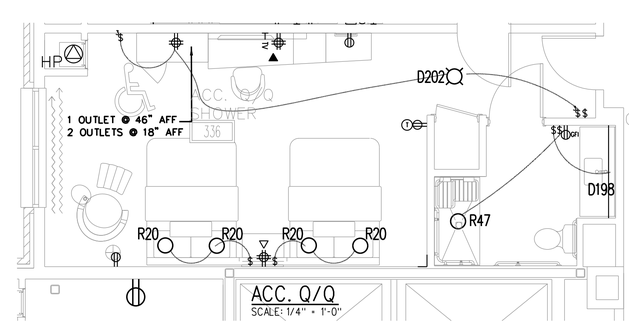

ACC. Q/Q
SCALE: 1/4" = 1'-0"

BENNETT ENGINEERING
MECHANICAL • ELECTRICAL
(207)865-9475

REVISION SCHEDULE

DATE	REVISION DESCRIPTION	BY

COPYRIGHT 2012 BY O.C.C.

CONSTRUCTION CORPORATION
11 CORPORATE DRIVE, BELMONT NH 03220
PHONE (603)527-9090 FAX (603)527-9191

TYPICAL GUESTROOM PART PLANS

PROJECT:
COMMERCIAL & MAPLE STREET MIXED USE DEVELOPMENT
PORTLAND ME.

DATE: 12-22-2014
SCALE: AS NOTED
DRAWN BY: CAT

SHEET: E12