PROGRESS PRINT
NOT FOR CONSTRUCTION

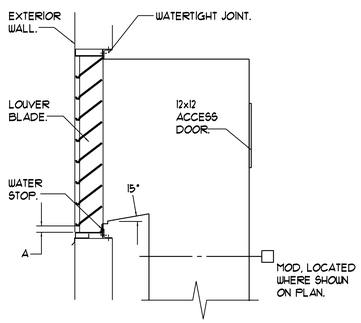

LOUVER DETAIL WITH DUCT FROM BELOW

NTS

NOTE IF DIMENSION "A" IS LESS THAN 1 INCH
SEE MODIFIED LOUVER DETAIL THIS SHEET.

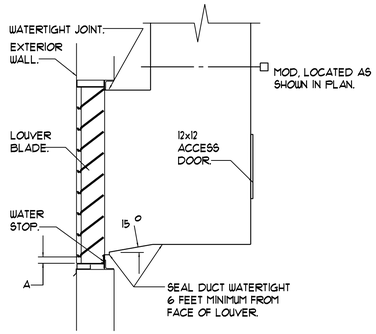

LOUVER DETAIL WITH DUCT FROM ABOVE

NTS

NOTE IF DIMENSION "A" IS LESS THAN 1 INCH
SEE MODIFIED LOUVER DETAIL THIS SHEET.

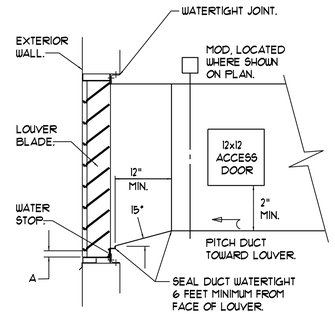

LOUVER DETAIL WITH HORIZONTAL DUCT

NTS

NOTE IF DIMENSION "A" IS LESS THAN 1 INCH
SEE MODIFIED LOUVER DETAIL THIS SHEET.

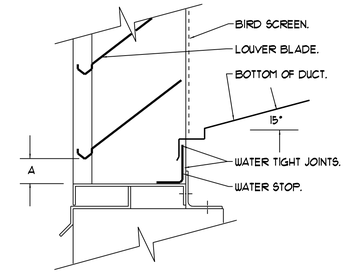

LOUVER CONNECTION DETAIL

NTS

NOTE TYPICAL FOR LOUVERS AND BLOCK VENTS.
IF DIMENSION "A" IS LESS THAN 1 INCH
SEE MODIFIED LOUVER DETAIL AT RIGHT
(LOUVERS ONLY).

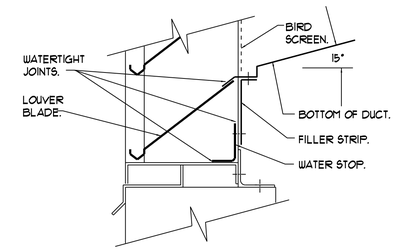

MODIFIED LOUVER DETAIL

NTS

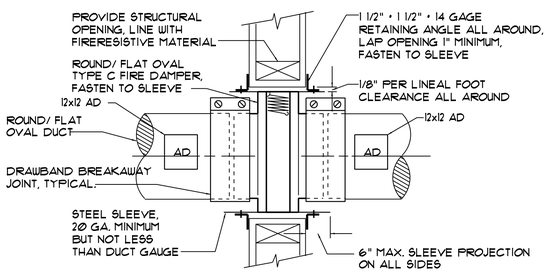

ROUND/FLAT OVAL FIRE DAMPER INSTALLATION DETAIL

NTS

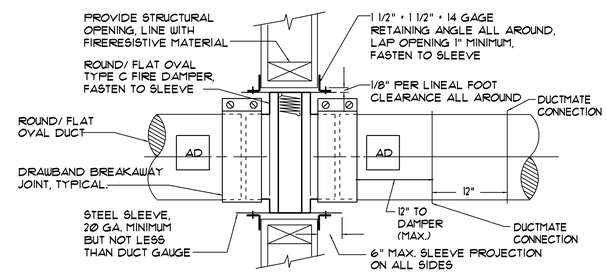

ROUND/FLAT OVAL FIRE DAMPER INSTALLATION DETAIL WHERE A 12x12 ACCESS DOOR IS NOT POSSIBLE

NTS

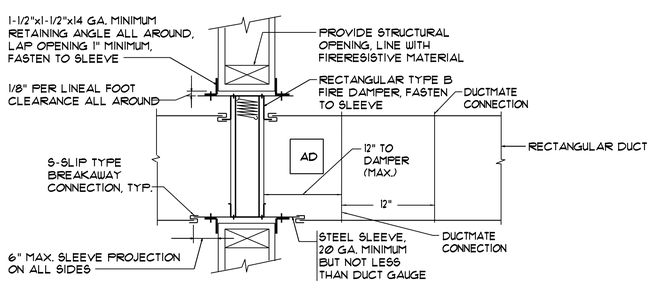

RECTANGULAR FIRE DAMPER INSTALLATION DETAIL WHERE 12X12 ACCESS DOOR IS NOT POSSIBLE

NTS

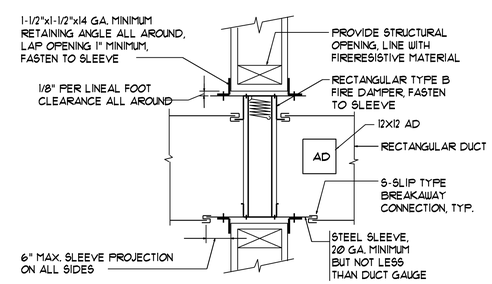

RECTANGULAR FIRE DAMPER INSTALLATION DETAIL

NTS

BENNETT ENGINEERING
MECHANICAL • ELECTRICAL
(207) 865-9475

REVISION SCHEDULE		
DATE	REVISION DESCRIPTION	BY

COPYRIGHT 2012 BY O.C.C.

OPECHEE
CONSTRUCTION CORPORATION
11 CORPORATE DRIVE, BELMONT NH 03220
PHONE (603)527-9090 FAX (603)527-9191

MECHANICAL DETAILS

PROJECT:
COMMERCIAL & MAPLE STREET MIXED USE DEVELOPMENT
PORTLAND ME.

DATE: 05-2013
SCALE: 1/8" = 1'-0"
DRAWN BY:
SHEET: M1.0