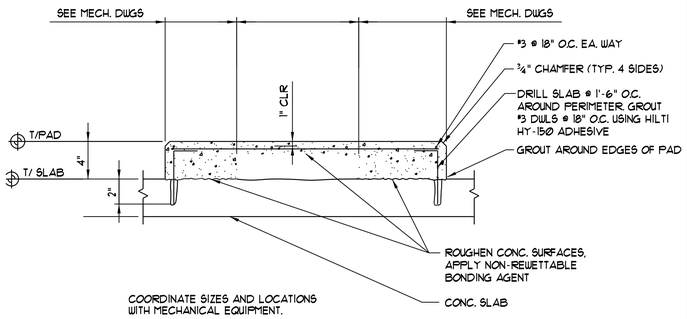

TYP. CONCRETE PAD ON SLAB

NTS

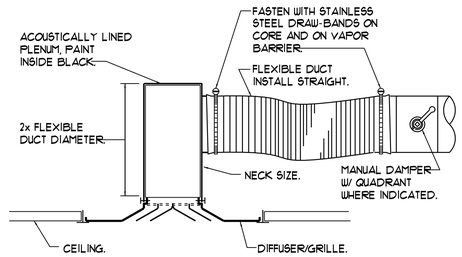

DIFFUSER/RETURN CONNECTION DETAIL

NTS

NOTE DETAIL TYPICAL FOR CEILING GRILLES, REGISTERS AND LINEAR DIFFUSERS. FOR SURFACE-MOUNT DEVICES, SUPPORT PLENUM FROM CEILING GRID WITH STEEL ANGLES FASTENED TO PLENUM.

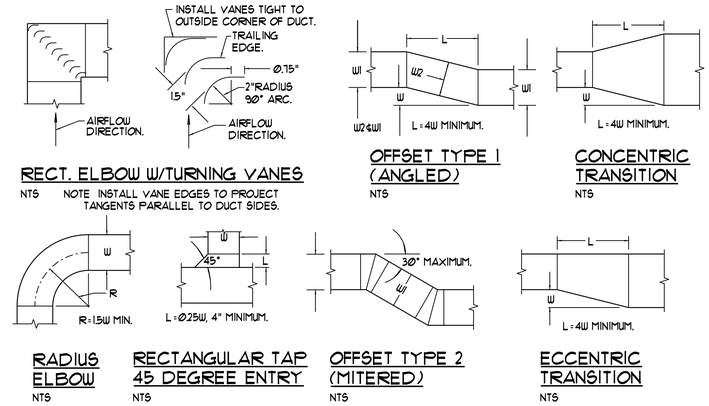

LOW PRESSURE DUCT CONSTRUCTION DETAILS - TYPICAL

NTS

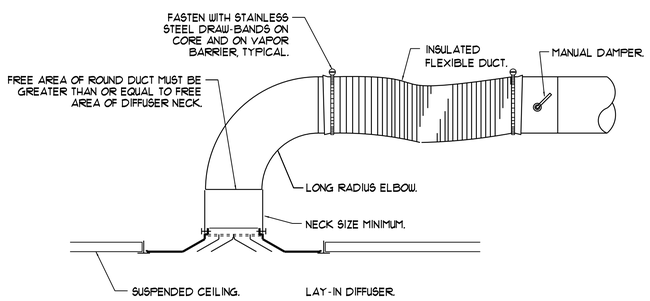

DIFFUSER/RETURN CONNECTION DETAIL

NTS

NOTE DETAIL TYPICAL FOR CEILING GRILLES, REGISTERS AND LINEAR DIFFUSERS. FOR SURFACE-MOUNT DEVICES, SUPPORT PLENUM FROM CEILING GRID WITH STEEL ANGLES FASTENED TO PLENUM. FOR RETURN GRILLES, PROVIDE FLEXIBLE DUCT TO THE PLENUM WHERE INDICATED, 2 FEET LONG MINIMUM, 4 FEET MAXIMUM.

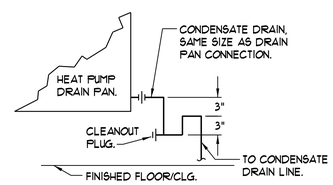

CONDENSATE TRAP DETAIL

NTS

NOTE - CAP UNUSED DRAIN PAN CONNECTIONS.

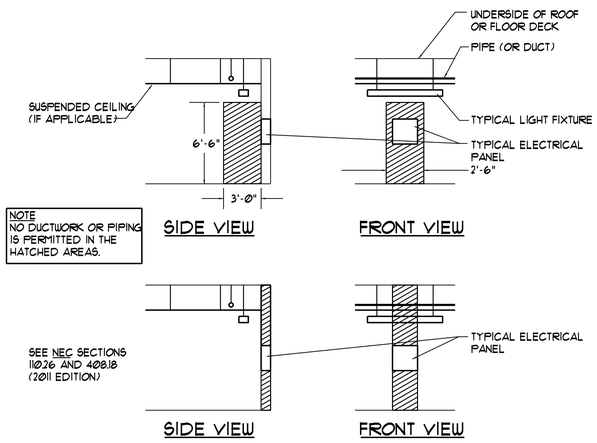

CLEARANCES AT ELECTRICAL PANELS

NTS

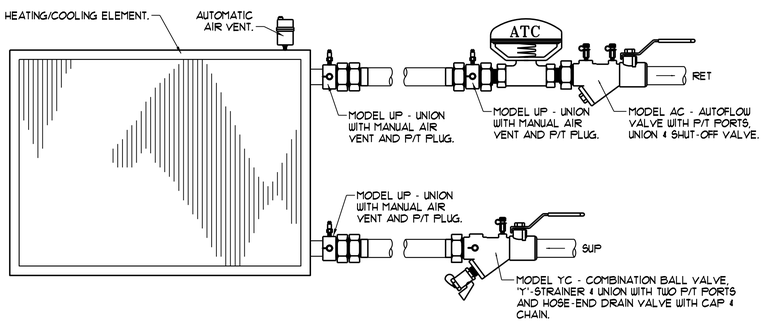

AUTOFLOW VALVE PIPING SCHEMATIC W/ 2-WAY VALVE

NTS

NOTE - MODEL NUMBERS BASED ON FLOW DESIGN INC. FOR PIPE SIZES 2" AND SMALLER.
NOTE - DETAIL APPLIES TO HEAT PUMPS. COORDINATE PIPING COMPONENTS WITH THE HEAT PUMP MANUFACTURER.

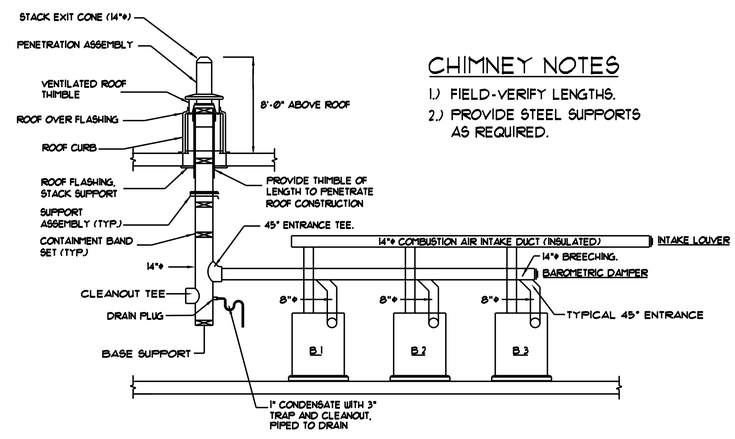

CHIMNEY NOTES

1.) FIELD-VERIFY LENGTHS.
2.) PROVIDE STEEL SUPPORTS AS REQUIRED.

TYPICAL BOILER VENTING DETAIL

NTS

BENNETT ENGINEERING
MECHANICAL • ELECTRICAL
(207) 805-8475

REVISION SCHEDULE

DATE	REVISION DESCRIPTION	BY

COPYRIGHT 2012 BY O.C.C.

OPECHEE
CONSTRUCTION CORPORATION
11 CORPORATE DRIVE, BELMONT NH 03220
PHONE (603)527-9090 FAX (603)527-9191

MECHANICAL DETAILS

PROJECT:
COMMERCIAL & MAPLE STREET MIXED USE DEVELOPMENT
PORTLAND ME.

DATE: 06-06-2013
SCALE: 1/8" = 1'-0"
DRAWN BY:
SHEET: M9