Kitchen Sink Rough in Detail

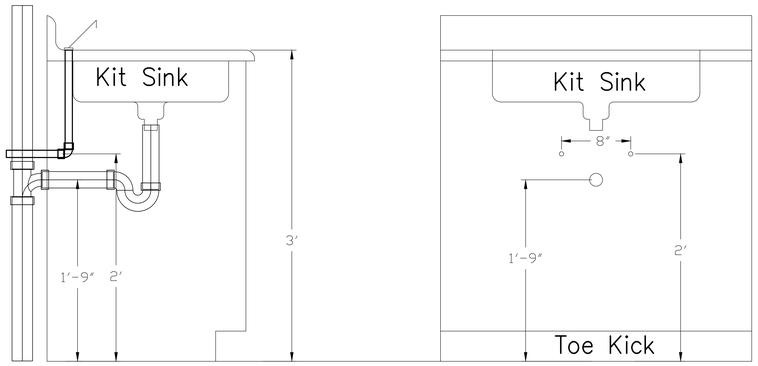

Lavatory Rough in Detail

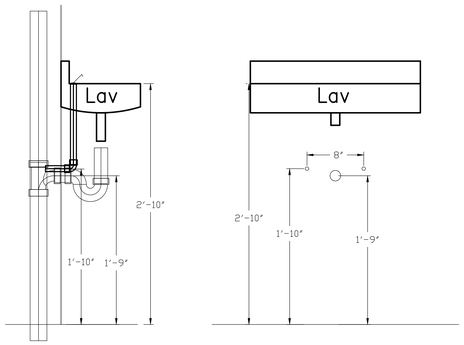

KITCHEN SINK ISLAND VENT TYP

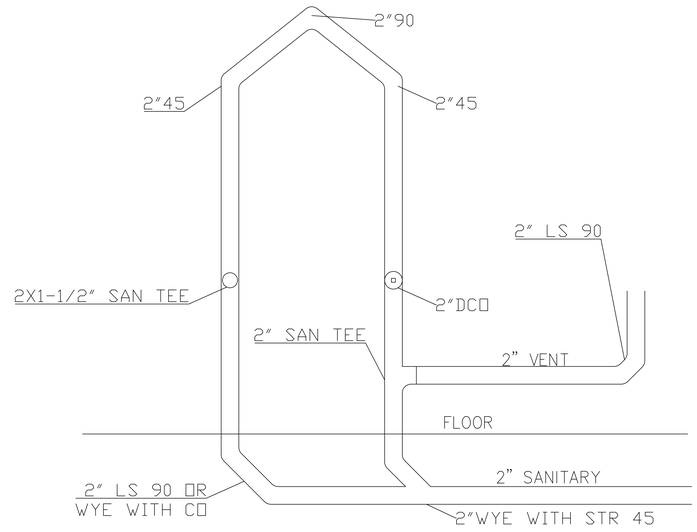

Hot Water Heater, Washing Machine and Heat Pump Condensate Detail

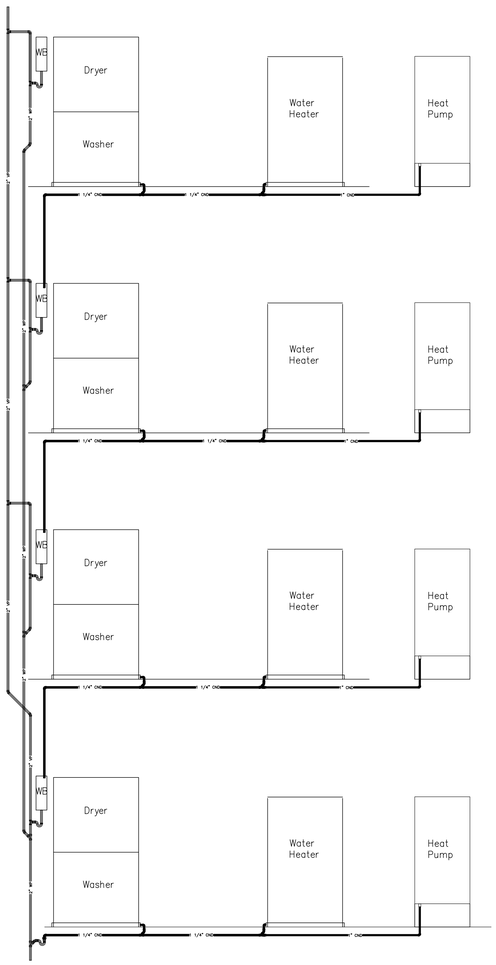

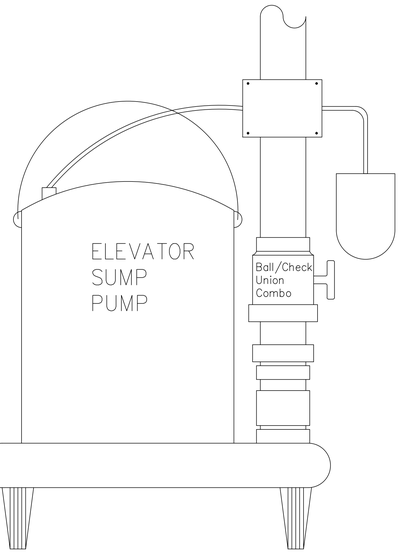

MOP BASIN AND FAUCET WITH INTREGAL CHECKS

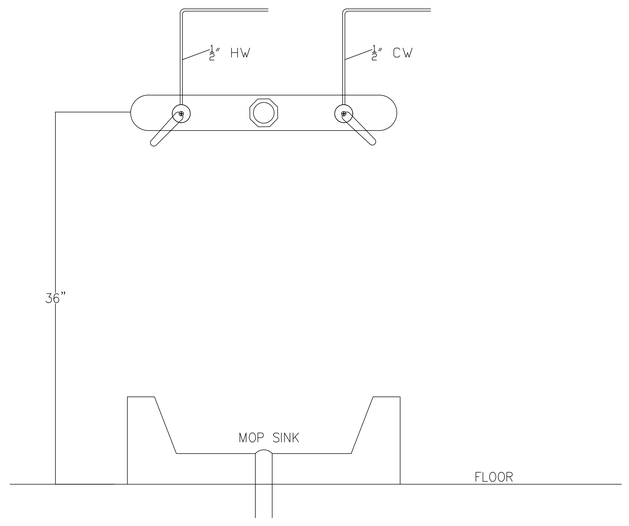

NOTE:
DETAIL IS FOR REFERENCE ONLY.
WATER SERVICE TO BE ARRANGED
ACCORDING TO CITY OF PORTLANDS
WATER DEPARTMENT
REQUIREMENTS.

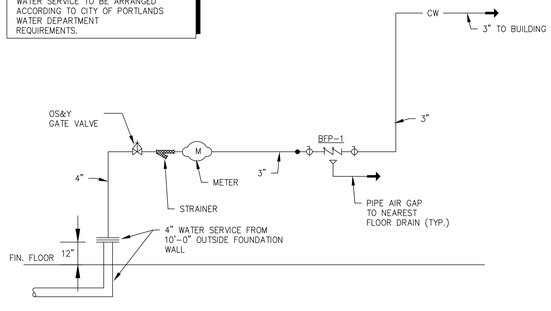

WATER SERVICE PIPING DETAIL
NOT TO SCALE

CONSULTANTS

Ranor Mechanical
P.O. Box 5036
962 Main Street
North Jay, ME 04262

STATE OF MAINE
WESLEY
DUBOIS
11041
LICENSED
PROFESSIONAL ENGINEER

PROJECT NAME & OWNER

Mixed Use Development

York & High Street
Portland, ME 04102

OWNER ADDRESS

REVISION	DATE	DESCRIPTION

SCALE: NTS
PROJECT NO: 1605
CAD DWG FILE: DOM -SAN DETAILS.dwg
DRAWN BY: RS
CHK'D BY: WPS
COPYRIGHT:

SHEET TITLE

Plumbing Details

P1.06

SHEET 1 OF 1