© Copyright 2016 Opechee Construction Corporation

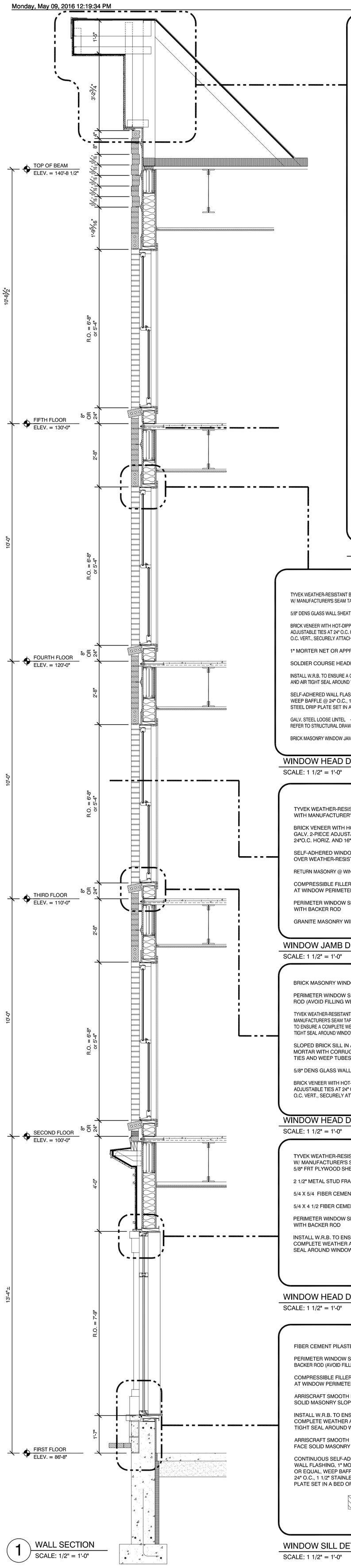

1 WALL SECTION
SCALE: 1/2" = 1'-0"

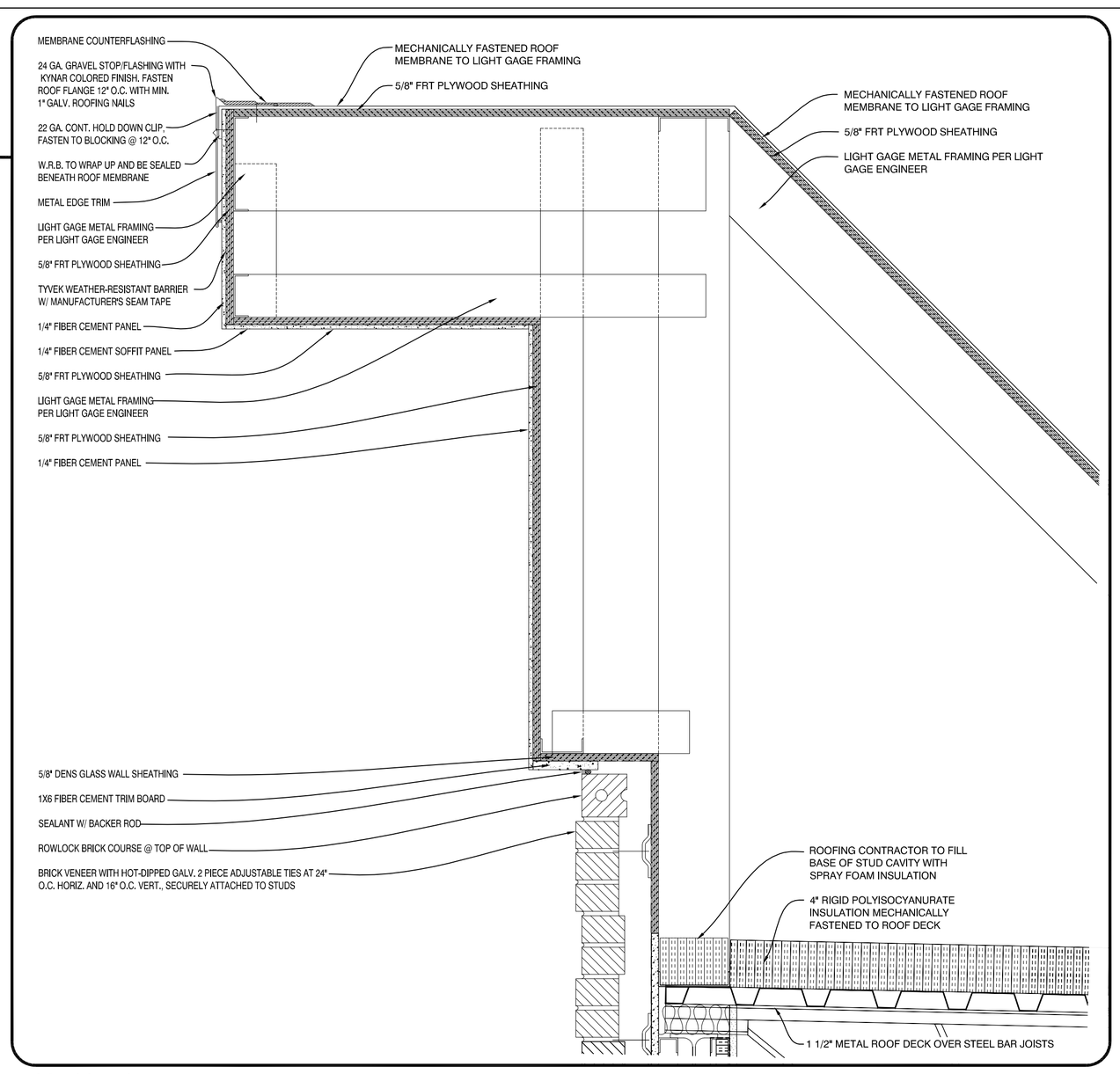

ROOF CORNICE DETAIL
SCALE: 1 1/2" = 1'-0"

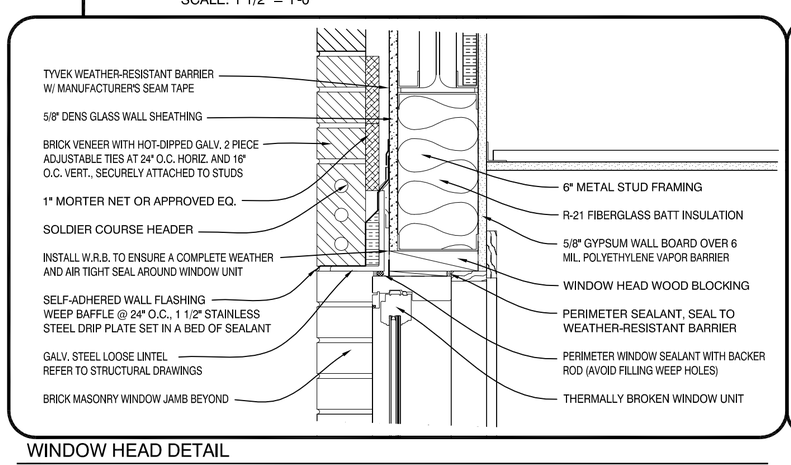

WINDOW HEAD DETAIL
SCALE: 1 1/2" = 1'-0"

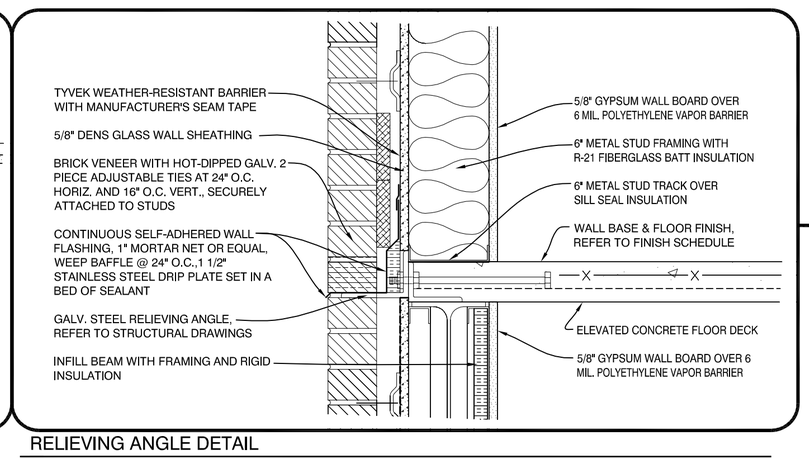

RELIEVING ANGLE DETAIL
SCALE: 1 1/2" = 1'-0"

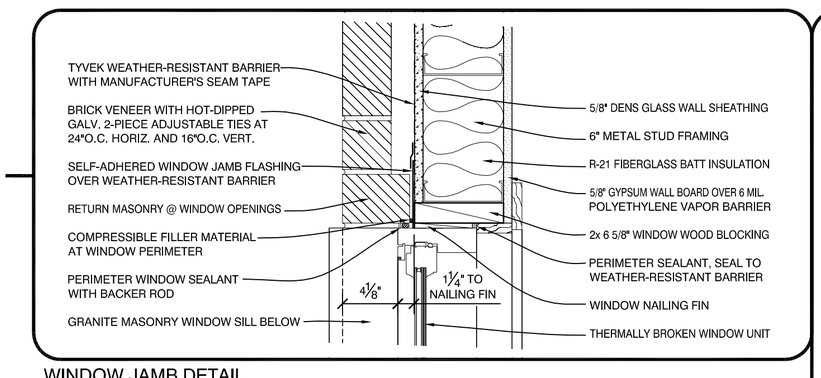

WINDOW JAMB DETAIL
SCALE: 1 1/2" = 1'-0"

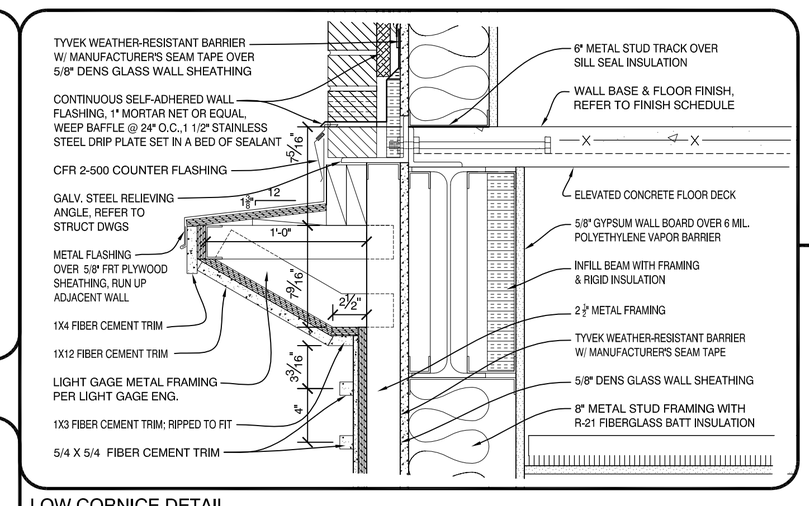

LOW CORNICE DETAIL
SCALE: 1 1/2" = 1'-0"

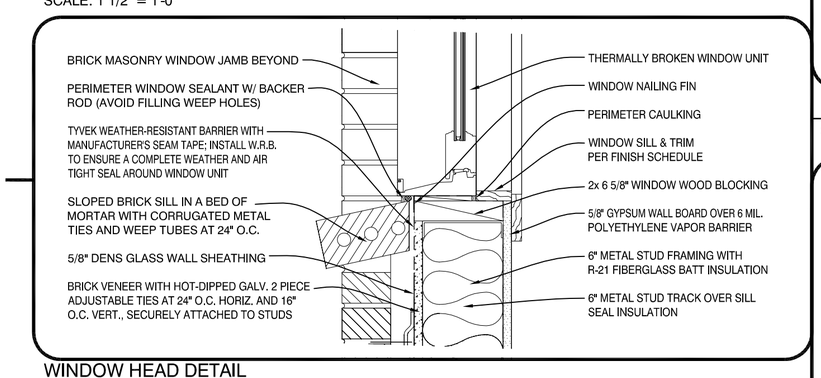

WINDOW HEAD DETAIL
SCALE: 1 1/2" = 1'-0"

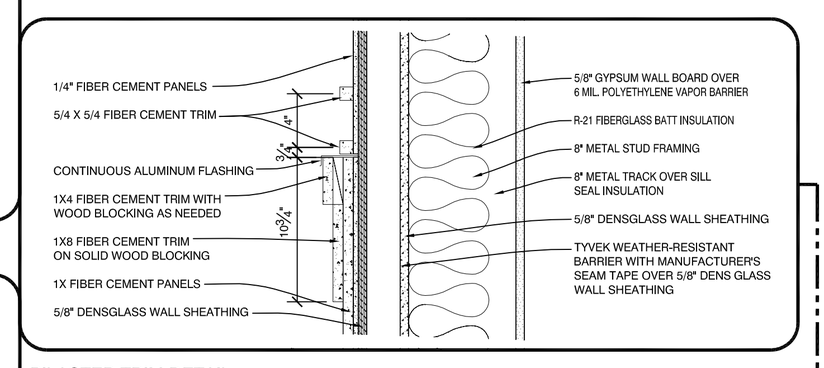

PILASTER TRIM DETAIL
SCALE: 1 1/2" = 1'-0"

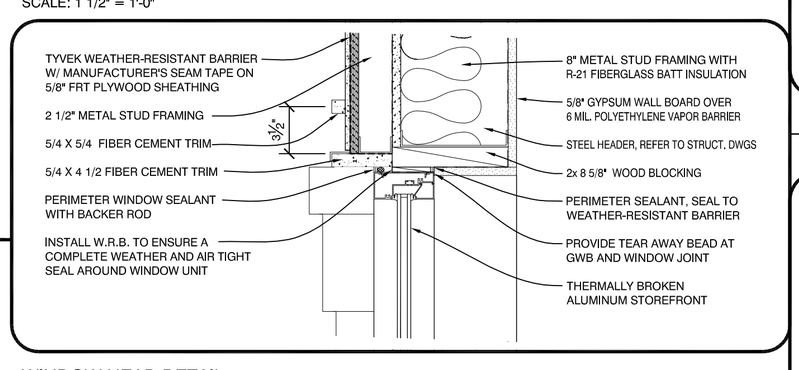

WINDOW HEAD DETAIL
SCALE: 1 1/2" = 1'-0"

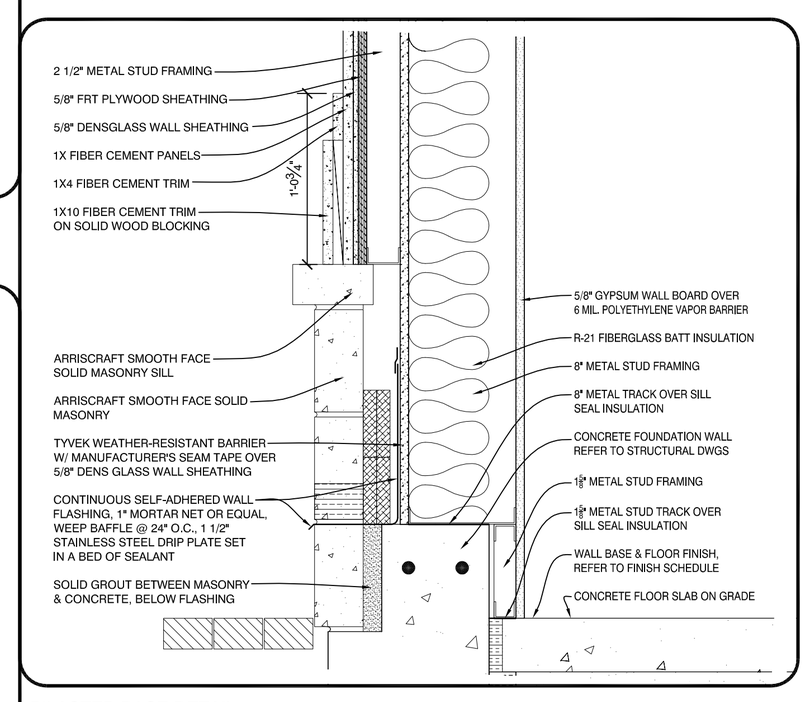

PILASTER BASE DETAIL
SCALE: 1 1/2" = 1'-0"

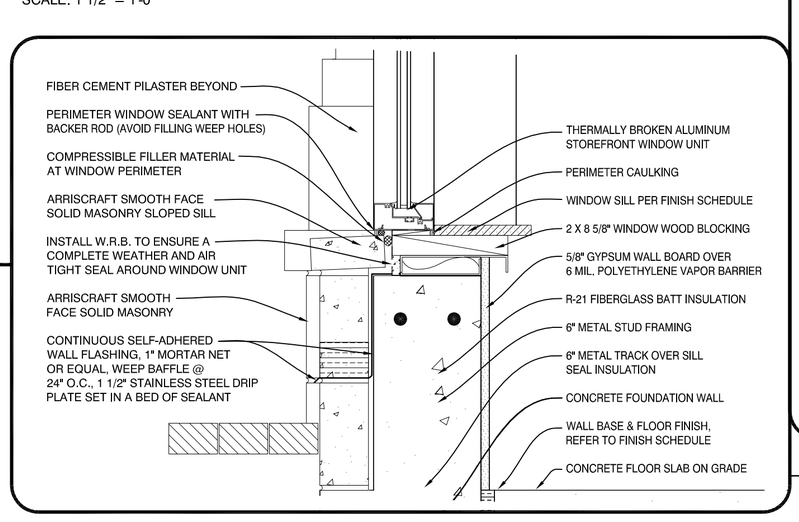

WINDOW SILL DETAIL
SCALE: 1 1/2" = 1'-0"

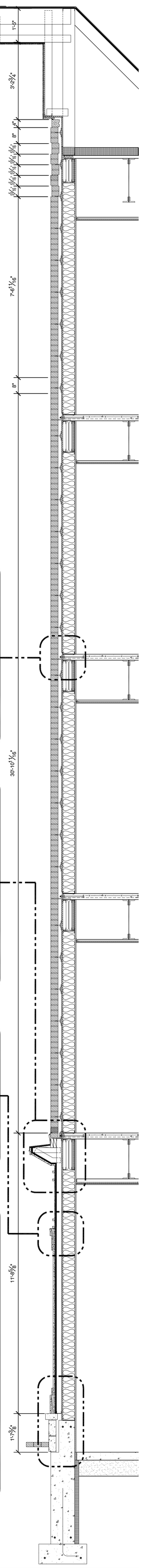

2 WALL SECTION
SCALE: 1/2" = 1'-0"

sheet number: A4.09

WALL SECTIONS

project architect: KAK
drawn by: JJD

ISSUED:
05-09-16 FOR BUILDING PERMIT

REVISION:

Mixed Use Development

York & High Street
Portland, Maine

LICENSED ARCHITECT KEITH A KELLEY No. 4213 STATE OF MAINE

OPECHEE CONSTRUCTION CORPORATION
11 CORPORATE DRIVE ■ BELMONT ■ NH 03220
PHONE (603) 527-9090 ■ WWW.OPECHEE.COM