Reviewed for Code Compliance
Inspections Division
Approved with Conditions
Date: 01/29/15

ACV
TriangleTube

prestige

User's Information Manual

ENERGY STAR

WARNING

To maintain the safety & longevity of your appliance read and follow the maintenance schedule information throughout this manual.

WARNING **If the information in this manual is not followed exactly, a fire or explosion may result causing property damage, personal injury or loss of life.**

FOR YOUR SAFETY

- **Do not store or use gasoline or other flammable vapors and liquids in the vicinity of this or any other appliance.**
- **WHAT TO DO IF YOU SMELL GAS**
  - **Do not try to light any appliance**
  - **Do not touch any electrical switch; do not use any phone in your building.**
  - **Immediately call your gas supplier from a neighbor's phone. Follow the gas supplier's instructions.**
  - **If you cannot reach your gas supplier, call the fire department.**

Installation and service must be performed by a qualified installer, service agency or the gas supplier.

Table of Contents

Reviewed for Code Compliance
Inspections Division
Approved with Conditions
Date: 01/29/15

PRODUCT & SAFETY INFORMATION Page 1

Service and Maintenance
PRESTIGE Operation
Boiler & System Water

SECTION I - Combustion Air - Prevention of Contamination Page 3

Potential Contaminating Products
Areas likely to find these Products

SECTION II - Maintenance Schedule Page 4

Service Technician
Owner Maintenance

SECTION III - Maintenance Procedures Page 5

Daily Maintenance
Monthly Maintenance
6-Month Maintenance

SECTION IV - Operations Instructions Page 8

SECTION V - TriMax Operation Page 9

Replacement Parts Page 21

The following terms are used throughout this manual to bring attention to the presence of potential hazards or to important information concerning the product.

WARNING

Indicates a potentially hazardous situation, which if ignored, can result in death, serious injury or substantial property damage.

CAUTION

Indicates a potentially hazardous situation which, if ignored, may result in minor injury or property damage.

NOTICE

Indicates special instructions on installation, operation or maintenance, which are important to equipment but not related to personal injury hazards.

Reviewed for Code Compliance
Inspections Division
Approved with Conditions
Date: 01/29/15

PRODUCT & SAFETY INFORMATION

WARNING

HOMEOWNER: The PRESTIGE installation manual is for use only by a qualified heating installer / service technician. Refer to this User's Information Manual for your reference. Failure to comply could result in severe personal injury, death or substantial property damage.

WARNING

A byproduct of any gas fired appliance (stove, fireplace, clothes dryer, water heater, furnace, boiler, etc.) is carbon monoxide. In the absence of any state or local codes requiring the installation of carbon monoxide detector and alarms, ACV-Triangle Tube recommends the following:

- Installation of a carbon monoxide detector and alarm that is wired on same electrical circuit as the boiler.
- Installation of a carbon monoxide detector and alarm on each level of the building where there are bedrooms and in the living area outside the bedrooms.
- Installation of a carbon monoxide detector and alarm in the room that houses the appliance.
- Installation of a carbon monoxide detector and alarm with battery back up.
- Installation of a carbon monoxide detector and alarm that complies with NFPA 720.

WARNING

ACV-Triangle Tube accepts no liability for any damage, injury or loss of life resulting from incorrect installtion, from alteration of any factory supplied parts or from the use of parts or fittings not specified by ACV-Triangle Tube. If there is a conflict or doubt about the proper installation/operation of the unit or any factory supplied or replacement parts please contact a qualified heating installer/service technician.

NOTICE

TECHNICIAN: When calling or writting about the PRESTIGE, please have the boiler model and serial number available.

STOP! READ BEFORE SERVICING

WARNING

Failure to adhere to the guidelines on this page can result in severe personal injury, death or substantial property damage.

Service and Maintenance

- To avoid electric shock, disconnect electrical supply before performing service or maintenance.
- Allow the unit to cool down prior to servicing to avoid severe burns.
- The PRESTIGE must be maintained as outlined in this manual and have at least annual service performed by a qualified service technician to ensure unit / system reliability.

PRESTIGE Operation

- Do not block flow of combustion air to the PRESTIGE. If the combustion air blockage is easily accessible and removable, then remove it. If blockage is not obvious or cannot be removed, have the unit and system checked by a qualified service technician.
- Do not allow contaminated air to enter the unit's combustion air inlet. See page 3 for details.
- The PRESTIGE is equipped with a low water cutoff device. The boiler and system piping must be filled and pressurized to 12 psig prior to startup. The unit will shut down if the pressure falls below 10 psig.
- Should overheating occur or the gas supply fail to shut off, DO NOT turn OFF or disconnect the electrical supply to the pump. Instead, shut off the gas supply at a location external to the appliance.
- Do not use this unit if any part has been under water. Immediately call a qualified service technician to inspect the boiler and to replace any part of the control system and any gas control, which has been under water.

Reviewed for Code Compliance
Inspections Division
Approved with Conditions
Date: 01/29/15

Boiler & System Water

- Have the boiler and system water chemistry checked at least annually by a qualified service technician.
- Do not use petroleum-based cleaning or sealing compounds in the boiler or system. Gaskets and seals in the system may be damaged. This can result in substantial property damage.
- Do not use any product not specifically designed for boiler / hydronic heating systems. Serious damage to the unit, piping system, personnel and / or property may result.
- Continual fresh makeup water will reduce the life of the PRESTIGE. Addition of oxygen can cause internal corrosion in the system components. All leaks in the piping system must be repaired at once to prevent makeup water.
- Do not add cold water to a hot unit. Thermal shock can cause premature failure to the boiler heat exchanger.

Reviewed for Code Compliance
Inspections Division
Approved with Conditions
Date: 01/29/15

SECTION I - COMBUSTION AIR - PREVENTION OF CONTAMINATION

WARNING

If the PRESTIGE combustion air inlet is located in any area likely to cause or contain contamination, or if products, which would contaminate the air cannot be removed, the combustion air must be re-piped and terminated to another location. Contaminated combustion air will damage the unit and its burner system, resulting in possible severe personal injury, death or substantial property damage.

WARNING

Do not operate a PRESTIGE unit if its combustion air inlet or the unit is located in or near a laundry room or pool facility. These areas will always contain hazardous contaminates.

Pool and laundry products and common household and hobby products often contain fluorine or chlorine compounds. When these chemicals pass through the burner and vent system, they can form strong acids. These acids can create corrosion of the heat exchanger, burner components and vent system, causing serious damage and presenting a possible threat of flue gas spillage or water leakage into the surrounding area.

Please read the following information. If contaminating chemicals will be present near the location of the combustion air inlet, the installer should pipe the combustion air inlet to another location per the PRESTIGE installation manual.

Potential Contaminating Products

- Spray cans containing chloro/fluorocarbons
- Permanent Wave Solutions
- Chlorinated wax
- Chlorine - based swimming pool chemicals and spa cleaners
- Calcium Chloride used for thawing ice
- Sodium Chloride used for water softening
- Refrigerant leaks
- Paint or varnish removers
- Hydrochloric acid / muriatic acid
- Cements and glues
- Antistatic fabric softeners used in clothes dryers
- Chlorine-type bleaches, detergents, and cleaning solvents found in household laundry rooms
- Adhesives used to fasten building products and other similar products

Areas likely to find these products

- Dry cleaning / laundry areas and establishments
- Beauty salons
- Metal fabrication shops
- Swimming pools and health spas
- Refrigeration Repair shops
- Photo processing plants
- Auto body shops
- Plastic manufacturing plants
- Furniture refinishing areas and establishments
- New building construction
- Remodeling areas
- Garages with workshops

Reviewed for Code Compliance
Inspections Division
Approved with Conditions
Date: 01/29/15

SECTION II - Maintenance Schedule

Service Technician

At least on an annual basis the following maintenance should be performed by a qualified service technician:

General

- Attend to any reported problems.
- Inspect the interior of the boiler jacket area; clean and vacuum if necessary.
- Clean the condensate trap and fill with fresh water.
- Check boiler fluid pH on systems.
- Check for leaks: water, gas, flue and condensate.
- Verify flue vent piping/gaskets and air inlet piping are in good condition, sealed tight and properly supported.
- Check boiler water pressure, piping and expansion tank.
- Check control settings.
- Check ignition electrode (sand off any white oxide; clean and reposition).
- Check ignition wiring and ground wiring.
- Check all control wiring and connections.
- Check burner flame pattern (stable and uniform).

Additional items if combustion or performance is poor:

- Clean heat exchanger and flue ways.
- Remove burner assembly and clean burner head using compressed air only.

Once the maintenance items are completed, review the service with the owner.

Owner Maintenance

Periodically:

- Check the area around the unit.
- Check and remove any blockage from the combustion air inlet and ventilation openings.
- Check the temperature/pressure gauge.

Monthly:

- Check vent piping.
- Check combustion air inlet piping.
- Check the pressure relief valve.
- Check the condensate drain system.

Every 6 months:

- Check boiler piping and gas supply piping for corrosion or potential signs of leakage.
- Operate the pressure relief valve.

⚠ WARNING

Follow the maintenance procedures given throughout this manual. Failure to perform the service and maintenance or follow the directions in this manual could result in damage to the PRESTIGE or in system components, resulting in severe personal injury, death or substantial property damage.

Reviewed for Code Compliance
Inspections Division
Approved with Conditions
Date: 01/29/15

SECTION III - MAINTENANCE PROCEDURES

WARNING

The PRESTIGE must be inspected and serviced annually, preferably at the start of the heating season, by a qualified service technician. In addition, the maintenance and care of the boiler as outlined on page 4 and further explained on pages 5 through 7 must be performed to assure maximum efficiency and reliability of the unit. Failure to service and maintain the PRESTIGE and the system components could result in equipment failure, causing possible severe personal injury, death or substantial property damage.

NOTICE

The following information provides detailed instruction for completing the maintenance items outlined in the maintenance schedule on page 4. In addition to this maintenance, the PRESTIGE should be serviced at the beginning of the heating season by a qualified service technician.

Daily Maintenance

Check the Surrounding Area

WARNING

To prevent potential of severe personal injury, death or substantial property damage, eliminate all the materials listed on page 3 from the area surrounding the unit and from the vicinity of the combustion air inlet. If contaminates are found:

Remove products immediately from the area. If they have been there for an extended period, call a qualified service technician to inspect the unit for possible damage from acid corrosion.

If products cannot be removed, immediately call a qualified service technician to re-pipe the combustion air inlet piping and locate the combustion air intake away from the contaminated areas.

1. Combustible / flammable materials - Do not store combustible materials, gasoline or other flammable vapors or liquids near the unit. Remove immediately if found.
2. Air contaminates - Products containing chlorine or fluorine, if allowed to contaminate the combustion air, will cause acidic condensate within the unit. This will cause significant damage to the unit. Read the list of potential materials listed on page 3 of this manual. If any of these products are in the room from which the unit takes its combustion air, they must be removed immediately or the combustion air intake must be relocated to another area.

Check Combustion Air Inlets

1. Verify that ventilation air openings to the mechanical room are open and unobstructed.
2. Verify that the unit's vent termination and combustion air intake are clean and free of obstructions. Remove any debris on the air intake or flue exhaust openings. If removing the debris does not allow the unit to operate correctly, contact your qualified service technician to inspect the unit and the vent / combustion air system.

Check Temperature Display and Pressure Gauge

1. Ensure the pressure reading on the pressure gauge does not exceed 25 psig. Higher pressure readings may indicate a problem with the expansion tank.
2. Ensure the temperature on the display panel does not exceed 194°F. Higher temperature readings may indicate a problem with the operating thermostat controls.
3. Contact a qualified service technician if problem persists.

Reviewed for Code Compliance
Inspections Division
Approved with Conditions
Date: 01/29/15

Monthly Maintenance

Check Vent Piping

1. Visually inspect the entire length of flue gas vent piping including all joints and appliance adapter for any signs of blockage, leakage or deterioration of gaskets. Notify a qualified service technician immediately if any problems are found.

⚠ WARNING

Failure to inspect the venting system as noted and have it repaired by a qualified service technician can result in the vent system failure, causing severe personal injury or death.

Check Combustion Air Inlet Piping

1. Visually inspect the combustion air inlet piping for any signs of blockage. Inspect the entire length of the combustion air inlet piping to ensure piping is intact and all joints are properly sealed.
2. Notify a qualified service technician if any problems are found.

Check Pressure Relief Valve

1. Visually inspect the primary pressure relief valve and the relief valve discharge pipe for signs of weeping or leakage.
2. If the pressure relief valve often weeps, the expansion tank may not be operating properly. Immediately contact a qualified service technician to inspect the unit and system.

Check Condensate Drain System

1. Ensure condensate drain assembly is firmly secured to bottom of heat exchanger/unit. See Fig.1.

⚠ WARNING

Do not operate PRESTIGE without condensate drain assembly firmly installed on unit and filled with water. If the trap is not installed and full of water flue gases can be emitted into the surrounding area causing severe personal injury or death.

2. While the unit is running, check the discharge end of the condensate drain tubing. Ensure no flue gas is leaking from the condensate drain tubing by holding your fingers near the opening.
3. If you notice flue gas leaking this indica condensate drain assembly. Fill the condensate drain assembly with water. Contact a qualified service technician to inspect the unit and condensate line and refill the condensate drain assembly if problem persists regularly.
4. Ensure the condensate drain line is not blocked by pouring water through the fill plug port on the condensate drain assembly. The water should flow out of the end of the drain line. If water does not appear at the end of the drain line, contact a qualified service technician to inspect and clean the condensate line.
5. To fill the condensate drain assembly, if necessary, remove the fill plug from the condensate assembly. Slowly pour water into the trap assembly until water appears at the end of the drain line. Stop filling and replace plug.

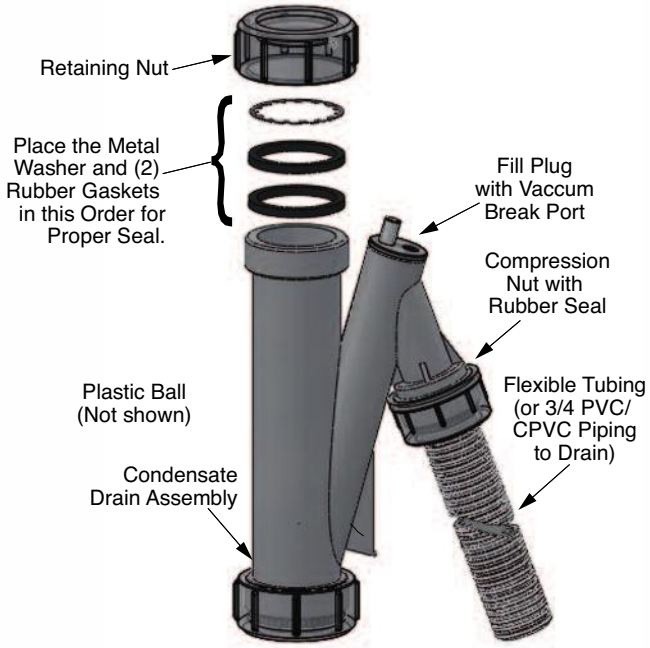

Fig. 1: Condensate Drain Assembly

Check Automatic Air Vents (If Used)

1. Remove the cap “A” from any automatic air vent in the system and check operation by depressing valve “B” slightly with the tip of a screwdriver. See Fig. 2.
2. If the air vent valve appears to be working freely and not leaking, replace cap “A”, screwing it on fully.

Reviewed for Code Compliance
Inspections Division
Approved with Conditions
Date: 01/29/15

3. Have the air vent replaced by a qualified service technician if it does not operate correctly.

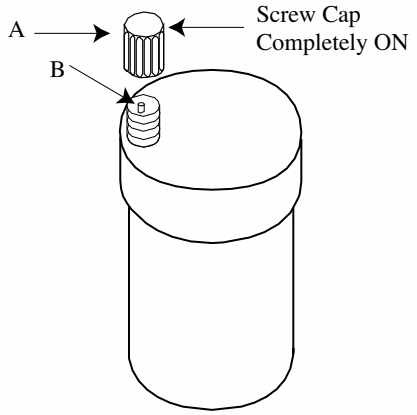

Fig. 2: Automatic Air Vent

6-Month Maintenance

Check Water and Gas Piping

1. Remove the boiler front jacket panel and perform a gas leak inspection per steps 1 through 6 of the Operating Instructions on page 8. If gas odor or leak is detected, immediately shut down the unit following procedures on page 8. Call a qualified service technician.
2. Visually inspect for leaks around the internal boiler water connections and around the heat exchanger. Visually inspect the external system piping, circulators, and system components and fittings. Immediately call a qualified service technician to repair any leaks.

⚠ WARNING

Have leaks fixed at once by a qualified service technician. Failure to comply could result in severe personal injury, death or substantial property damage.

Operate Pressure Relief Valve

1. Before proceeding, verify that the relief valve outlet has been piped to a safe place of discharge, avoiding any possibility of scalding from hot water.

⚠ WARNING

To avoid water damage or scalding due to valve operation, a discharge line must be connected to the relief valve outlet and directed to a safe place of disposal. This discharge line must be installed by a qualified service technician or heating / plumbing installer in accordance with the PRESTIGE installation manual. The discharge line must be terminated so as to eliminate possibility of severe burns or property damage should the valve discharge.

2. Read the temperature display and pressure gauge to ensure the system is pressurized. Lift the relief valve top lever slightly, allowing water to relieve through the valve and discharge piping.
3. If water flows freely, release the lever and allow the valve to seat. Watch the end of the relief valve discharge pipe to ensure that the valve does not weep after the line has had time to drain. If the valve weeps, lift the lever again to attempt to clean the valve seat. If the valve does not properly seat and continues to weep afterwards, contact a qualified service technician to inspect the valve and system.
4. If the water does not flow from the valve when you lift the lever completely, the valve or discharge line may be blocked. Immediately shut the unit down per the instructions on page 8. Call a qualified service technician to inspect the valve and system.

Reviewed for Code Compliance
Inspections Division
Approved with Conditions
Date: 01/29/15

SECTION IV - OPERATING INSTRUCTIONS

FOR YOUR SAFETY READ BEFORE LIGHTING

WARNING **If you do not follow these instructions exactly, a fire or explosion may result causing property damage, personal injury or loss of life.**

A. This appliance does not have a pilot. It is equipped with an ignition device which automatically lights the burner. **DO NOT** try to light the burner by hand.

B. BEFORE OPERATING, smell all around the appliance area for gas. Be sure to smell next to the floor because some gas is heavier than air and will settle on the floor.

WHAT TO DO IF YOU SMELL GAS

- Do not try to light any appliance.
- Do not touch any electric switch; do not use any phone in your building
- Immediately call your gas supplier from a neighbor's phone. Follow the gas supplier's instructions.
- If you cannot reach your gas supplier, call the fire department.

C. Use only your hand to turn the external manual gas valve. Never use tools. If the valve will not turn by hand, don't try to repair it; call a qualified service technician. Force or attempted repair may result in a fire or explosion.

D. Do not use this appliance if any part has been under water. Immediately call a qualified service technician to inspect the appliance and to replace any part of the control system and any gas control which has been under water.

OPERATING INSTRUCTIONS

1. **STOP!** Read the safety information above. This appliance is equipped with an ignition device which automatically lights the burner. DO NOT try to light the burner by hand.
2. Set room thermostat(s) to lowest setting. Turn the external manual gas valve handle clockwise "CLOSE" (valve handle shall be perpendicular to gas piping).
3. Turn the service switch on the PRESTIGE control panel OFF.
4. Remove the front jacket panel on the unit.
5. Turn the external manual gas valve handle counter clockwise to "OPEN" gas supply (valve handle shall be parallel to gas piping).
6. Wait five (5) minutes to clear out any gas. If you then smell gas in the jacket enclosure or around the unit, STOP! Follow "B" in the safety information above. If you don't smell gas, go to the next step.
7. Turn the service switch on the PRESTIGE control panel "ON".
8. Set room thermostat(s) to desired setting(s).
9. The PRESTIGE control panel display will show the current operating status on the Status Line at the bottom of the screen. "Standby" means there is no call for heat (all thermostats are satisfied). "CH Demand" indicates a space heating call has been received. "DHW Demand" indicates a domestic hot water call has been received. A flame icon will be displayed when the unit is fired.
10. If the unit will not operate with a call for heat and the system piping is not hot, follow the instructions "To Turn Off Gas to Appliance", below and call your service technician or gas supplier.
11. Replace the front jacket panel. Make sure the panel is seated firmly in place and all mounting screws are tightened.

TO TURN OFF GAS TO APPLIANCE

1. Set the room thermostat to lowest setting.
2. Turn the service switch on the PRESTIGE control panel to "OFF"
3. Turn the external manual gas valve handle clockwise to "CLOSE".

Reviewed for Code Compliance
Inspections Division
Approved with Conditions
Date: 01/29/15

SECTION V - TRIMAX OPERATION

The TriMax Boiler Management System is designed to be flexible yet easy to use. TriMax monitors and controls the Prestige to provide heat as efficiently as possible. All TriMax features are easy to use through a graphical display where information is presented either graphically or in plain English, so code charts are not required.

Navigation is performed through four arrow buttons **UP**, **DOWN**, **LEFT**, **RIGHT** with a center **OK** button for making selections and entering information. The **INSTALLER** button (the small round button) provides the installing contractor with full access to all available features after entering a password.

Figure 2 – TriMax Navigation Buttons

The Main Menu can be entered from the Home Screen by pressing the **OK** button. The menu system utilizes icons to represent each selection. The current selected menu is displayed as a reversed image with a text description shown at the top of the display. Menus can be entered by highlighting the desired icon and pressing the **OK** button. The Home Screen icon at the bottom of each screen returns to the Home Screen when selected. The Previous Screen icon at the bottom of each screen returns to the previous screen when selected.

Reviewed for Code Compliance
Inspections Division
Approved with Conditions
Date: 01/29/15

TriMax Menu Structure

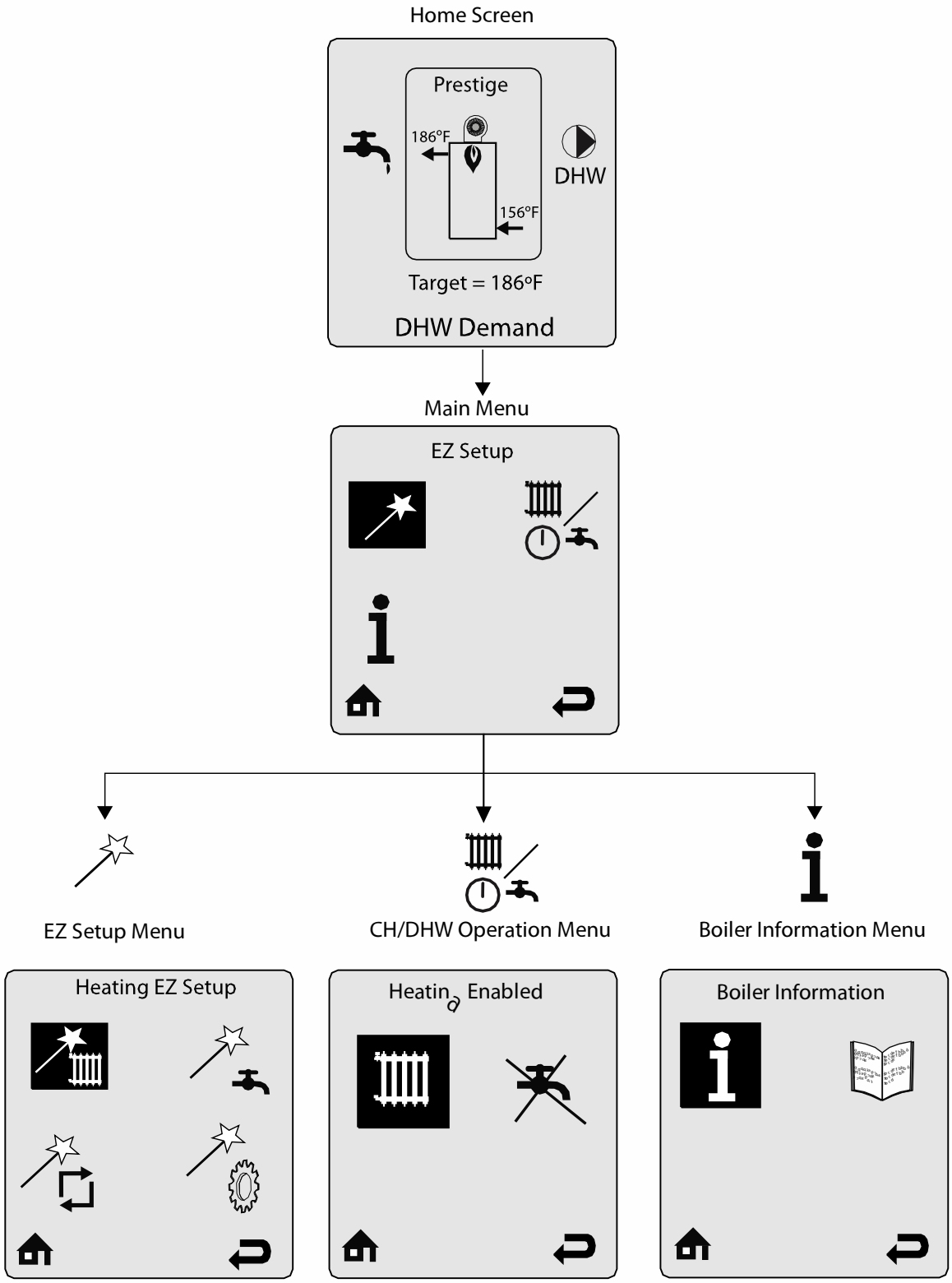

Reviewed for Code Compliance
Inspections Division
Approved with Conditions
Date: 01/29/15

Home Screen

The Home Screen presents status information in a very user friendly way so that the current state of the boiler can be quickly accessed.

The Prestige is represented in the center of the Home Screen. Basic operating information such as supply and return temperatures are displayed as well as current burner status. A flame symbol is displayed when the unit is fired. The flame size changes to indicate the current firing rate.

The radiator icon indicates that a central heating call has been received. A small number 1 or 2 indicates which CH calls are active.

The faucet icon indicates that a domestic hot water call has been received.

The percentage icon indicates that an external modulation call has been received.

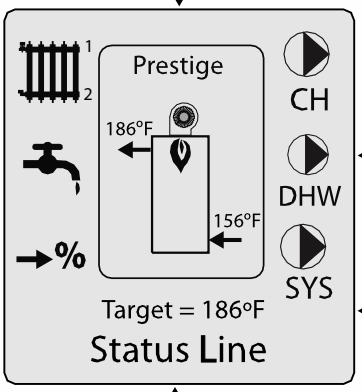

Circulator icons indicate which circulators are currently powered.

This line provides basic information. The user can press the **LEFT** or **RIGHT** arrow buttons to view Target, Supply, Return, Domestic,Outdoor, and System Temperatures.

The status line displays the current operating state of the Prestige. See page 11 for a list of all Status Line Messages.

The screen backlight will illuminate when any button is pressed and remain illuminated for five minutes. Press the **UP** or **DOWN** buttons to turn on the backlight while at the Home Screen without making any changes.

The screen contrast can be adjusted at the Home Screen by pressing and holding the **OK** button then pressing and holding the **LEFT** arrow along with the **OK** button. The contrast can then be increased by pressing the **UP** button or decreased by pressing the **DOWN** button while holding in the **OK** button and **LEFT** arrow. All buttons must be released and the procedure performed again to switch between increasing and decreasing contrast.

Reviewed for Code Compliance
Inspections Division
Approved with Conditions
Date: 01/29/15

Status Line Messages

Status Line Message	Description
Standby	Indicates that the Prestige is ready to respond when a demand is received.
CH Demand	A central heating call has been received.
DHW Demand	A domestic hot water call has been received.
CH / DHW Demand	Central heating and domestic hot water calls are being received simultaneously. Both calls are being satisfied simultaneously because domestic hot water priority has been disabled.
DHW Priority	Central heating and domestic hot water calls are being received simultaneously. Domestic hot water call is being satisfied first because it has priority over central heating calls.
Priority Timeout	Central heating and domestic hot water calls are being received simultaneously. The domestic hot water priority time limit has been exceeded. Priority will now switch back and forth between central heating and domestic hot water calls until one call is satisfied.
External Demand	An external modulation call has been received.
Slave Operation	The Prestige is a slave in a cascade system.
Manual Operation	The burner or circulators have manually been enabled in the Installer Menu.
CH Burner Delay	The burner will not fire until the call blocking time has elapsed.
DHW Burner Delay	The burner will not fire until the call blocking time has elapsed.
CH Setpoint Reached	The burner is not fired because the supply/system water temperature exceeds the setpoint. The central heating circulator continues to operate and the burner will fire again once the supply/system water temperature drops below the set-point.
DHW Setpoint Reached	The burner is not fired because the supply/system water temperature exceeds the setpoint. The domestic circulator continues to operate and the burner will fire again once the supply/system water temperature drops below the setpoint.
CH Post Pump	The central heating circulator is running to remove heat from the Prestige at the completion of a call.
DHW Post Pump	The domestic hot water circulator is running to remove heat from the Prestige at the completion of a call.
Freeze Protection	The burner is fired because the freeze protection feature has been activated. Freeze protection will end once the supply/system water temperature is raised to 60°F [16°C].
Boiler Protection	The burner firing rate is being reduced because of an excessive difference between the boiler supply and return temperatures. The firing rate will begin increasing once the temperature difference is less than 45°F [25°C].
Lockout Description	The lockout which currently has the Prestige shut down is displayed.

Reviewed for Code Compliance
Inspections Division
Approved with Conditions
Date: 01/29/15

Main Menu

The Main Menu can be entered from the Home Screen by pressing the **OK** button. The menu system utilizes icons to represent each selection. The currently selected menu is displayed as a reversed image with a text description shown at the top of the display. Menus can be entered by highlighting the desired icon and pressing the **OK** button.

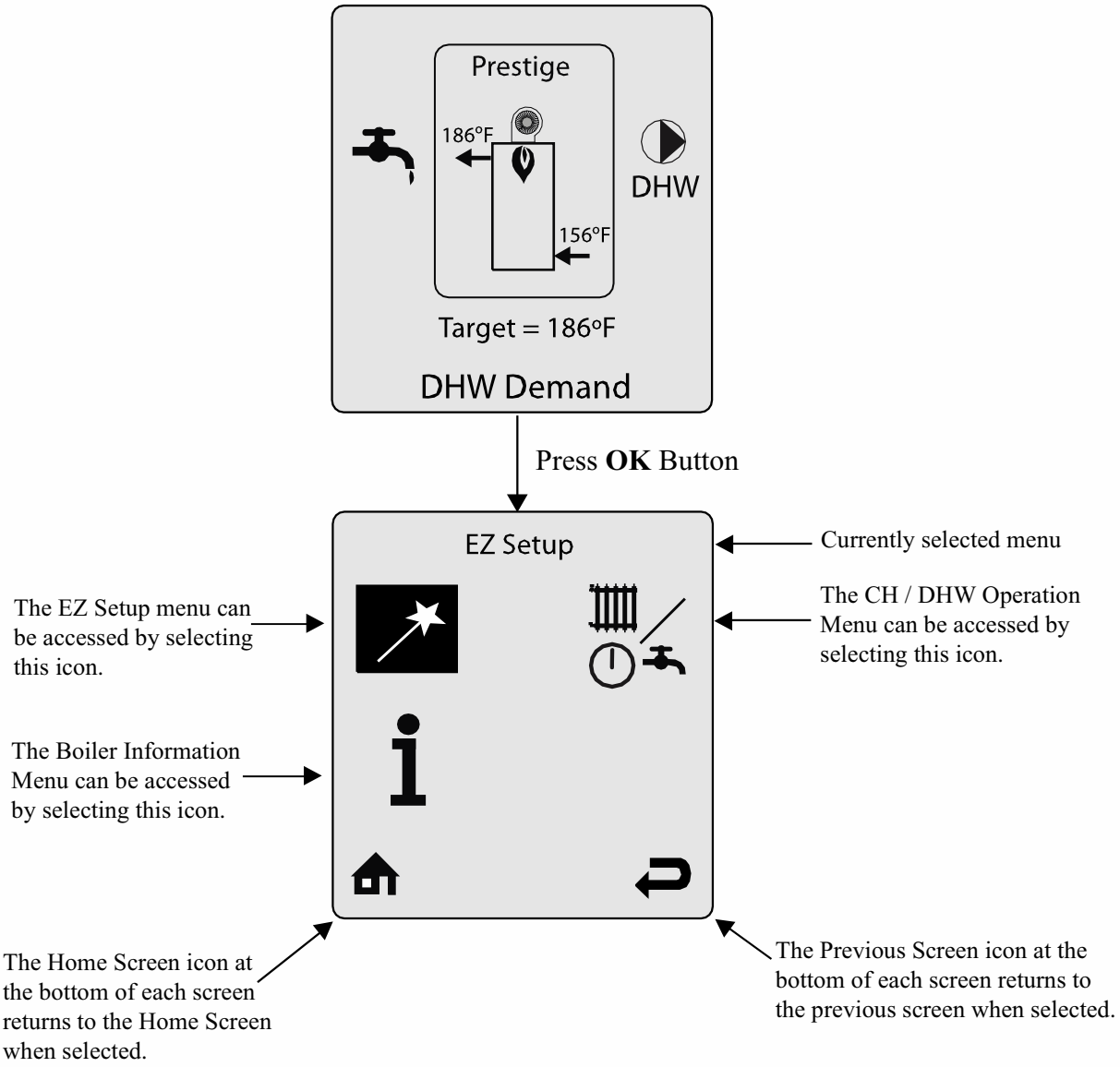

Reviewed for Code Compliance
Inspections Division
Approved with Conditions
Date: 01/29/15

CH/DHW Operation Menu

The CH / DHW Operation Menu can be entered from the Main Menu by selecting the CH / DHW Operation icon and pressing the **OK** button. The CH / DHW Operation Menu provides a simple way to disable either the central heating or domestic hot water functions of the Prestige.

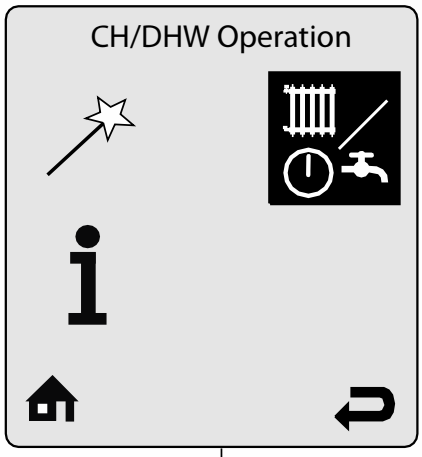

Select CH/DHW Operation

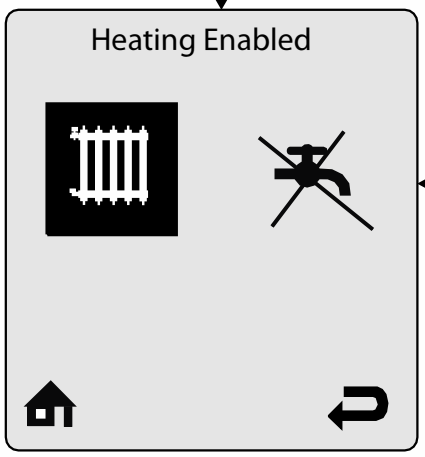

Heating Operation can be enabled and disabled by selecting the radiator icon and pressing the **OK** button to toggle operation between enabled and disabled. A radiator icon with an X through it indicates that the heating function is disabled. This icon is also displayed on the Home Screen when disabled.

Domestic Hot Water Operation can be enabled and disabled by selecting the faucet icon and pressing the **OK** button to toggle operation between enabled and disabled. A faucet icon with an X through it indicates that the domestic hot water function is disabled. This icon is also displayed on the Home Screen when disabled.

Reviewed for Code Compliance
Inspections Division
Approved with Conditions
Date: 01/29/15

Boiler Information

Boiler Information can be viewed by selecting the Boiler Information icon and pressing the **OK** button. Boiler Information provides real time operating information of the Prestige.

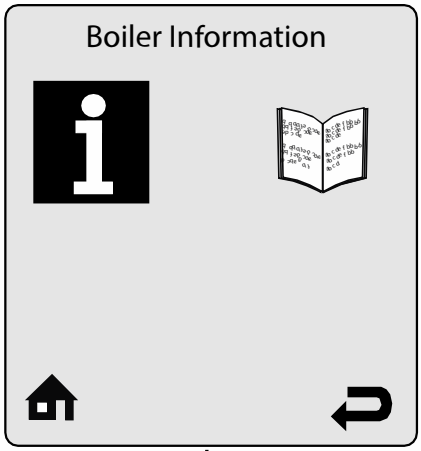

Select Boiler Information

Boiler Information displays six boiler readings at a time. Each line contains an information item followed by its current value. Press the **UP** or **DOWN** buttons to scroll through additional information items.

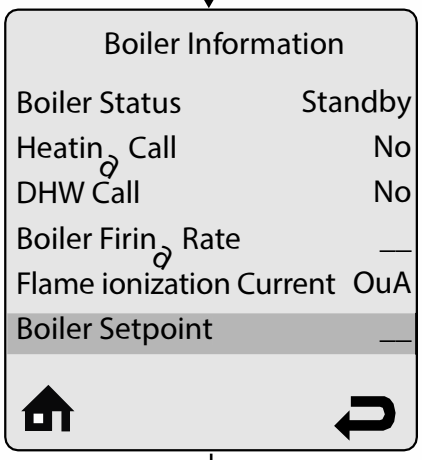

Select Boiler Setpoint

Some information items include a logging function. Select the information item then press the **OK** button to view its graph. One sample is recorded every 12 minutes to produce a graph of the last 24 hours.

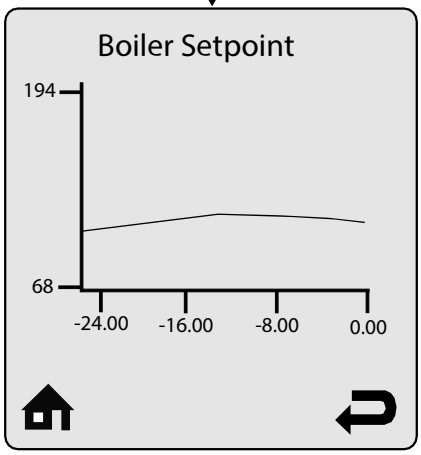

The following information items have a logging function.
Boiler Firing Rate
Flame Ionization Current
Boiler Setpoint
Boiler Supply Temperature
Boiler Return Temperature
Boiler Flue Temperature
Outdoor Temperature
DHW Storage Temperature
External Modulation Signal

Reviewed for Code Compliance
Inspections Division
Approved with Conditions
Date: 01/29/15

Information Items

Information Item	Description
Boiler Status	Displays the current operating state of the Prestige. This is the same as the status line on the home screen.
Heating Call	Displays if a central heating call is present.
DHW Call	Displays if a domestic hot water call is present
Boiler Firing Rate	Displays the current firing rate of the Prestige.
Flame Ionization Current	Displays the current flame ionization current from the ignitor.
Boiler Setpoint	Displays the current setpoint of the Prestige.
Boiler Supply Temperature	Displays the current supply temperature of the Prestige.
Boiler Return Temperature	Displays the current return temperature of the Prestige.
Boiler Flue Temperature	Displays the current flue temperature of the Prestige.
Outdoor Temperature	Displays the current outdoor temperature.
DHW Storage Temperature	Displays the current DHW storage temperature when Indirect Water Heater Sensor PSRKIT22 is installed.
External Modulation Signal	Displays the current external modulation signal being received from an external controller.
CH Ignitions	Displays the number of central heating ignitions since the unit was installed. This counter increases in increments of twenty.
CH Runtime	Displays the number of hours the Prestige has run for a central heating call since the unit was installed.
DHW Ignitions	Displays the number of domestic hot water ignitions since the unit was installed. This counter increases in increments of twenty.
DHW Runtime	Displays the number of hours the Prestige has run for a domestic hot water call since the unit was installed.

Reviewed for Code Compliance
Inspections Division
Approved with Conditions
Date: 01/29/15

Lockout History

Lockout History can be viewed by selecting the Lockout History icon and pressing the **OK** button. The Lockout History Screen lists the last eight lockouts along with how long ago they occurred.

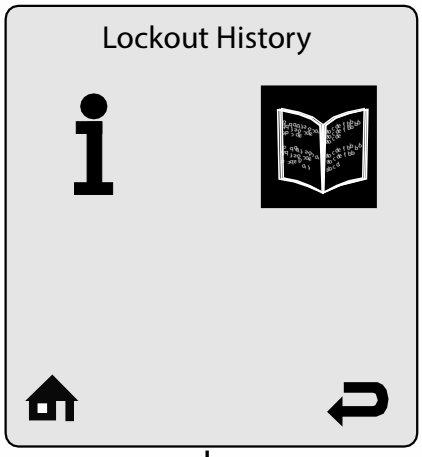

Select Lockout History

Lockout History displays the last eight lockouts. The newest lockout is displayed at the top of the screen. The lockout message is followed by how long ago the error occured. Press the **UP** or **DOWN** buttons to scroll through additional lockouts.

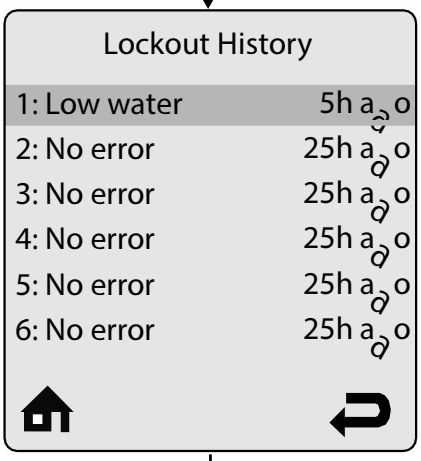

Select Lockout #1

Lockout Details displays the lockout at the top of the screen followed by a snapshot of the boiler information recorded at the time of the lockout. Press the **UP** or **DOWN** buttons to scroll through additional information items.

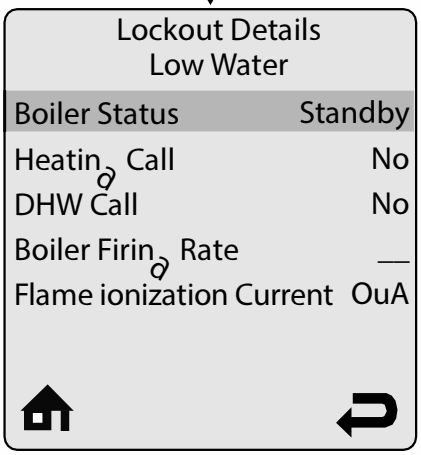

Reviewed for Code Compliance
Inspections Division
Approved with Conditions
Date: 01/29/15

Lockout Screen

The Lockout Screen replaces the Home Screen if a lockout occurs. The screen backlight will also illuminate constantly while the Prestige is locked out. Pressing any arrow button will return to the Home Screen so that additional troubleshooting can be performed. See pages 19 and 20 for a list of lockouts and descriptions.

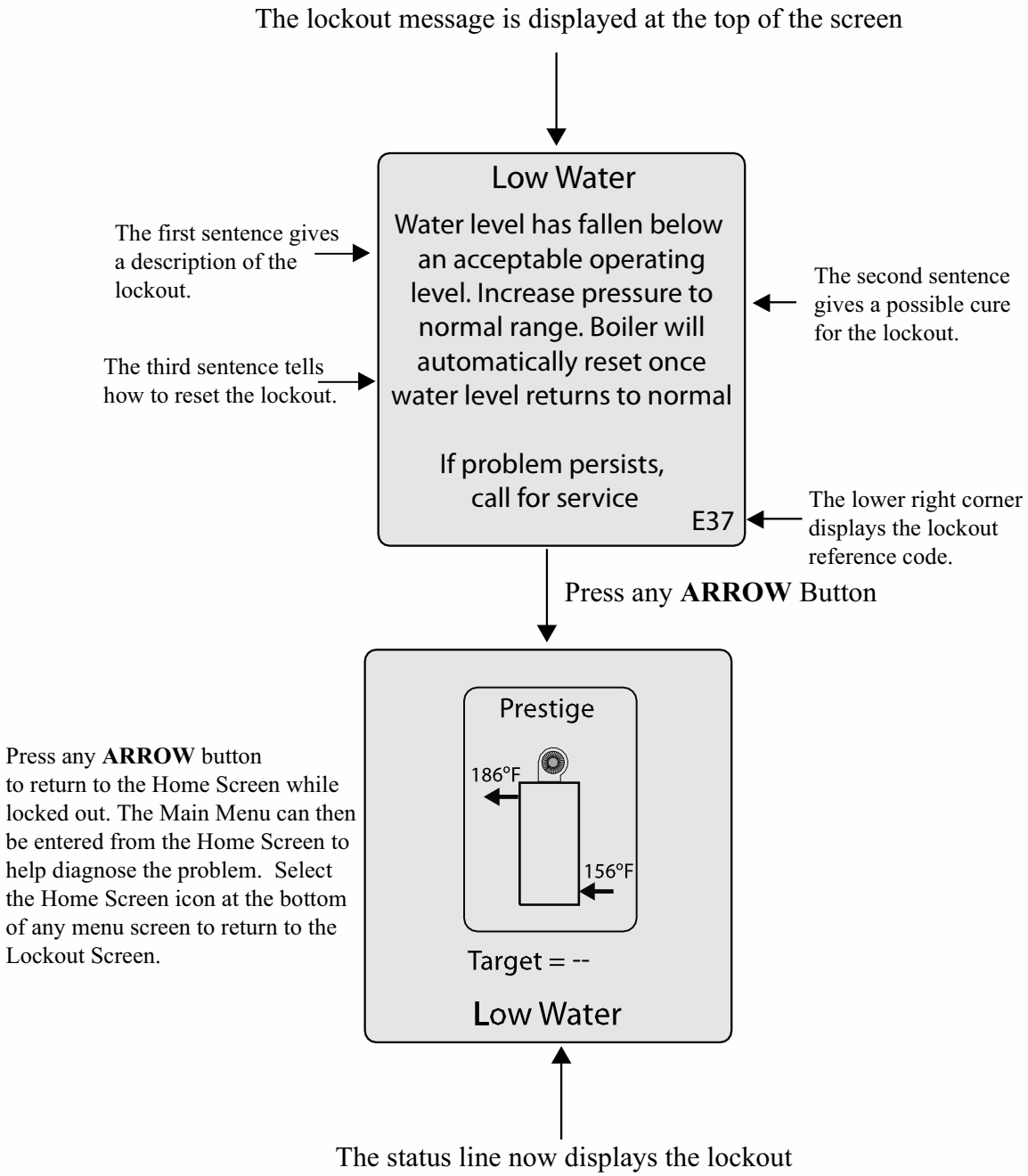

Reviewed for Code Compliance
Inspections Division
Approved with Conditions
Date: 01/29/15

Manual Reset Hard Lockouts

Code	Lockout Message	Description
E1	Failed Ignition	The burner failed to light after 5 ignition attempts.
E2	False Flame	A flame is being detected prior to ignition.
E3	High Boiler Temperature	Boiler temperature has reached 210°F [99ºC]
E5	Blower Speed	Blower is not at correct speed or speed signal is not being received by control module.
E8	Flame Circuit Error	Flame circuit test failed.
E9	Gas Valve Circuit Error	Gas valve circuit test failed.
E13	Reset Limit Reached	Resets are limited to 5 every 15 minutes.
E15	Sensor Drift	Supply or return sensor reading has drifted.
E16	Supply Sensor Stuck	Supply sensor reading is not changing.
E17	Return Sensor Stuck	Return sensor reading is not changing.
E18	Sensor Failure	Supply or return sensor reading changed very rapidly.
E21	Internal Control Fault	A / D conversion error.
E30	Supply Sensor Shorted	A short circuit has been detected in the boiler supply temperature sensor circuit.
E31	Supply Sensor Open	An open circuit has been detected in the boiler supply temperature sensor circuit.
E43	Return Sensor Shorted	A short circuit has been detected in the boiler return temperature sensor circuit.
E44	Return Sensor Open	An open circuit has been detected in the boiler return temperature sensor circuit.
E80	Return > Supply	Return temperature is higher than supply temperature.
E87	External Limit Open	An external manual reset limit has opened

Reviewed for Code Compliance
Inspections Division
Approved with Conditions
Date: 01/29/15

Automatic Reset Soft Lockouts

Code	Lockout Message	Description
E7	High Flue Temperature	Flue temperature exceeds high limit.
E12	Internal Control Fault	EEPROM misconfiguration
E25	Internal Control Fault	CRC check error.
E32	DHW Sensor Shorted	A short circuit has been detected in the DHW temperature sensor circuit.
E33	DHW Sensor Open	An open circuit has been detected in the DHW temperature sensor circuit.
E34	Low Voltage	Line voltage has fallen below an acceptable operating level.
E37	Low Water	Water level has fallen below an acceptable operating level.
E45	Flue Sensor Shorted	A short circuit has been detected in the boiler flue temperature sensor circuit.
E46	Flue Sensor Open	An open circuit has been detected in the boiler flue temperature sensor circuit.
E76	External Limit Open	An external automatic reset boiler limit has opened.
E81	Sensor Drift	Supply and return temperatures are not equal.
E89	Incorrect Setting	A parameter setting is in conflict with another setting.
E90	Firmware Mismatch	Control module and display firmware versions are incompatible.
E91	System Sensor Shorted	A short circuit has been detected in the system temperature sensor circuit.
E92	System Sensor Open	An open circuit has been detected in the system temperature sensor circuit.
E93	Outdoor Sensor Shorted	A short circuit has been detected in the outdoor temperature sensor circuit.
E94	Internal Display Fault	Display memory error.
E95	Supply Sensor Error	Supply sensor reading is invalid.
E96	Outdoor Sensor Open	An open circuit has been detected in the outdoor temperature sensor circuit.
E97	Cascade Mismatch	Cascade configuration has changed.
E98	Cascade Bus Error	Communication with other boilers has been lost.
E99	Controller Bus Error	Communication between boiler display and control module has been lost.

Reviewed for Code Compliance
Inspections Division
Approved with Conditions
Date: 01/29/15

WARNING

Replacement parts must be purchased through a local ACV-Triangle Tube distributor. When ordering part please provide the model number and description and/or part number of replacement part. Use only genuine ACV-Triangle Tube replacement to ensure warranty coverage and to avoid damage to appliance and improper operation of appliance. Contact ACV-Triangle Tube at 856-228-8881 or www.triangletube.com for list of distributors nearest you.

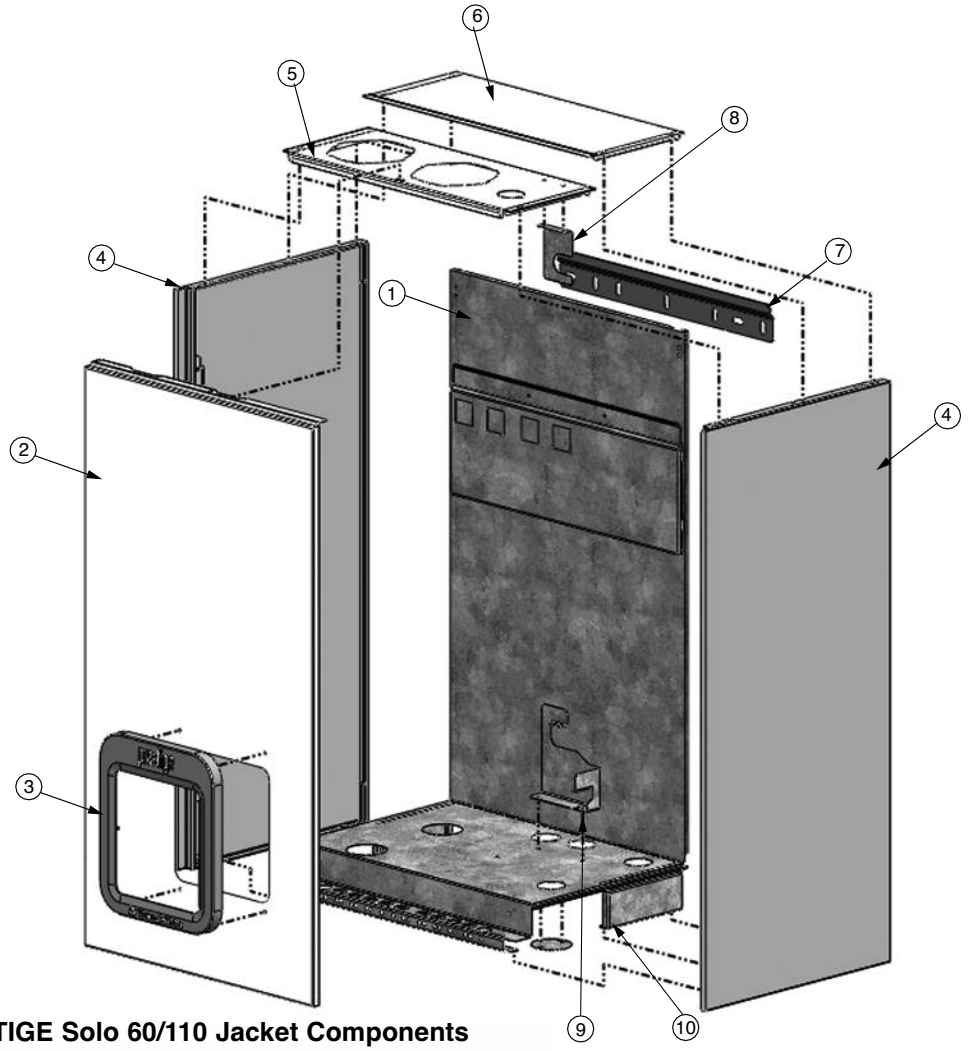

Fig. 3: PRESTIGE Solo 60/110 Jacket Components

Item	Part #	Description
1	PTJKT10R	Rear Panel
2	PTJKT08F	Front Jacket Panel
3	PTRKIT129	Control Enclosure Bezel
4	PTJKT22S	Side Jacket Panel (Left or Right)
5	PTJKT14T	Top Jacket Panel
6	PTJKT18T	Top Jacket Access Panel
7	PSRKIT21	Wall Mounting Bracket with Hardware
8	PTJKTSUP02	Support - Boiler Supply Piping
9	PTJKTSUP03	Support - Boiler Return Piping
10	PTJKTSUP01	Support - Jacket

Reviewed for Code Compliance
Inspections Division
Approved with Conditions
Date: 01/29/15

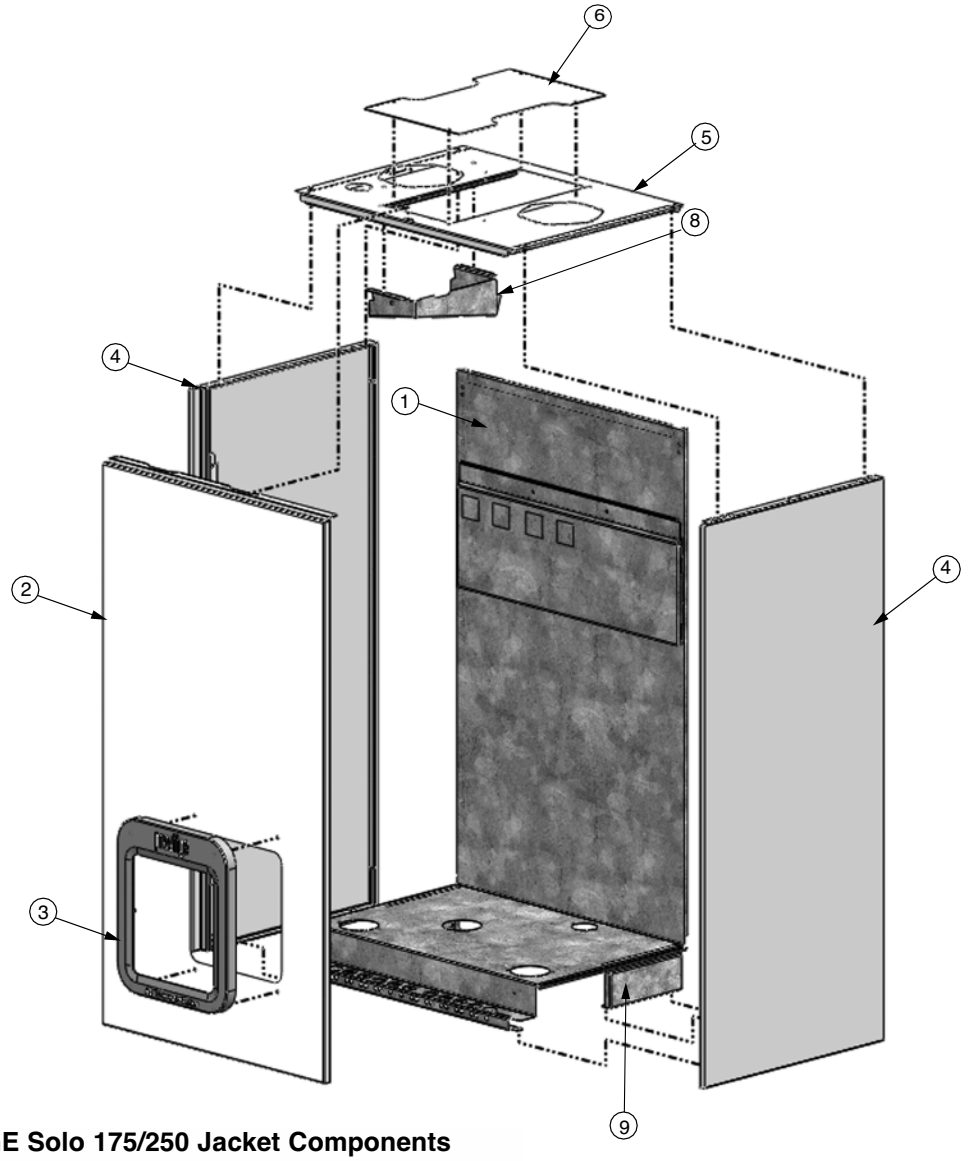

Fig. 4: PRESTIGE Solo 175/250 Jacket Components

Item	Part #	Description
1	PTJKT12R	Rear Panel
2	PTJKT08F	Front Jacket Panel
3	PTRKIT129	Control Enclosure Bezel
4	PTJKT22S	Side Jacket Panel (Left or Right)
5	PTJKT17T	Top Jacket Panel
6	PTJKT20T	Top Jacket Access Panel
7	PSRKIT21	Wall Mounting Bracket with Hardware (Not Shown)
8	PTJKT21D	Combustion Air Deflector
9	PTJKTSUP01	Support - Jacket

Reviewed for Code Compliance
Inspections Division
Approved with Conditions
Date: 01/29/15

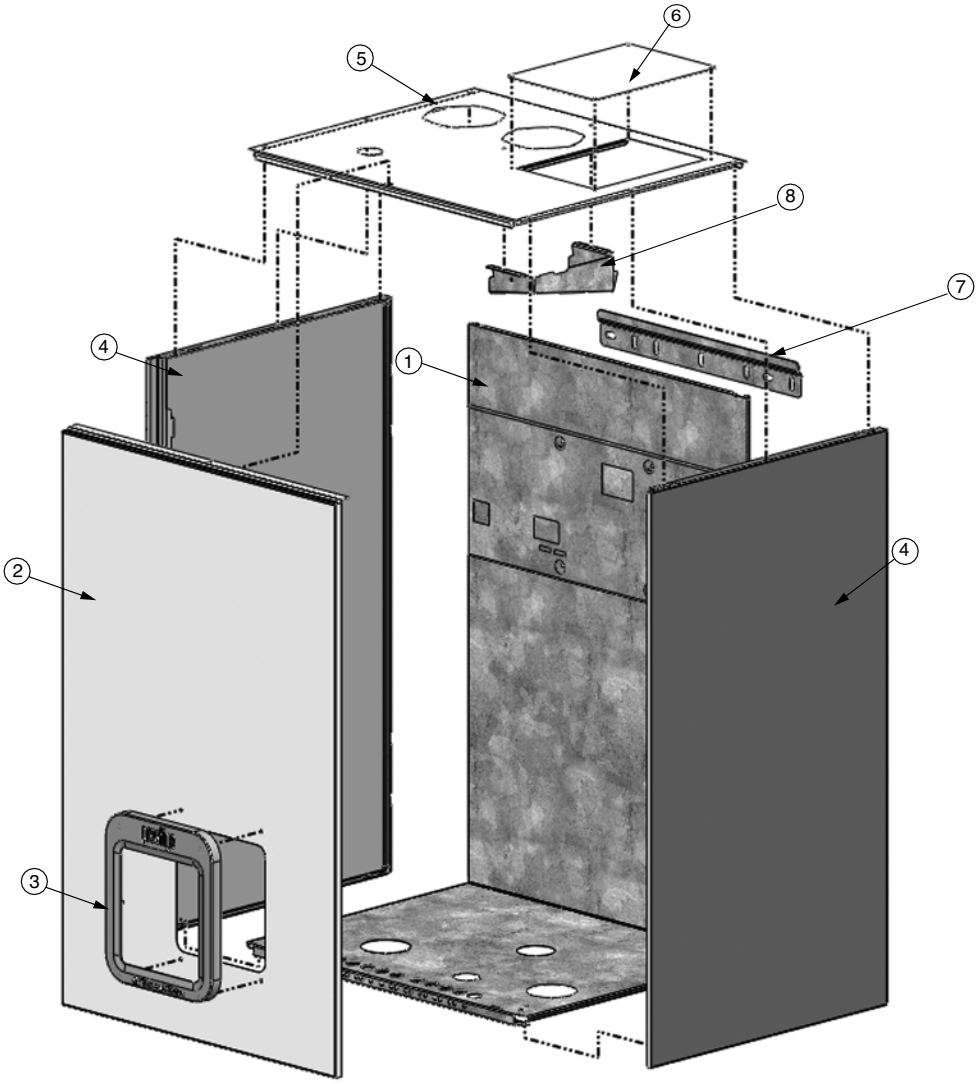

Fig. 5: PRESTIGE Solo 399 Jacket Components

Item	Part #	Description
1	PTJKT13R	Rear Panel
2	PTJKT09F	Front Jacket Panel
3	PTRKIT129	Control Enclosure Bezel
4	PTJKT23S	Side Jacket Panel (Left or Right)
5	PTJKT16T	Top Jacket Panel
6	PSJKT06T	Top Jacket Access Panel
7	PSRKIT21	Wall Mounting Bracket with Hardware
8	PTJKT21D	Combustion Air Deflector

Reviewed for Code Compliance
Inspections Division
Approved with Conditions
Date: 01/29/15

Replacement Parts

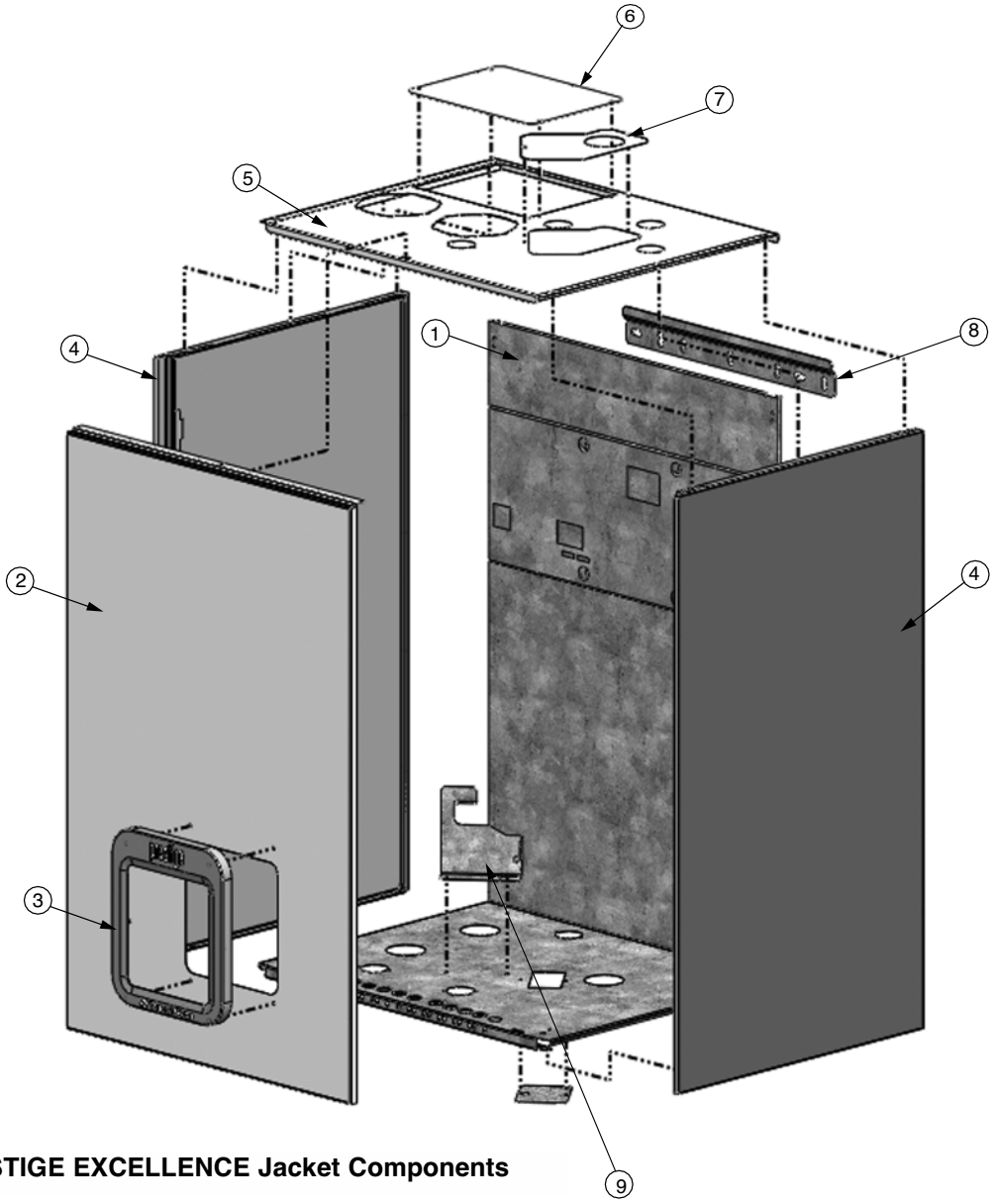

Fig. 6: PRESTIGE EXCELLENCE Jacket Components

Item	Part #	Description
1	PTJKT11R	Rear Panel
2	PTJKT09F	Front Jacket Panel
3	PTRKIT129	Control Enclosure Bezel
4	PTJKT23S	Side Jacket Panel (Left or Right)
5	PTJKT15T	Top Jacket Panel
6	PTJKT19T	Top Jacket Panel - Blower Access
7	PEJKT03T	Top Jacket Panel - IDWH Access
8	PSRKIT21	Wall Mounting Bracket with Hardware
9	PTJKTSUP03	Support - Boiler Return Piping

Reviewed for Code Compliance
Inspections Division
Approved with Conditions
Date: 01/29/15

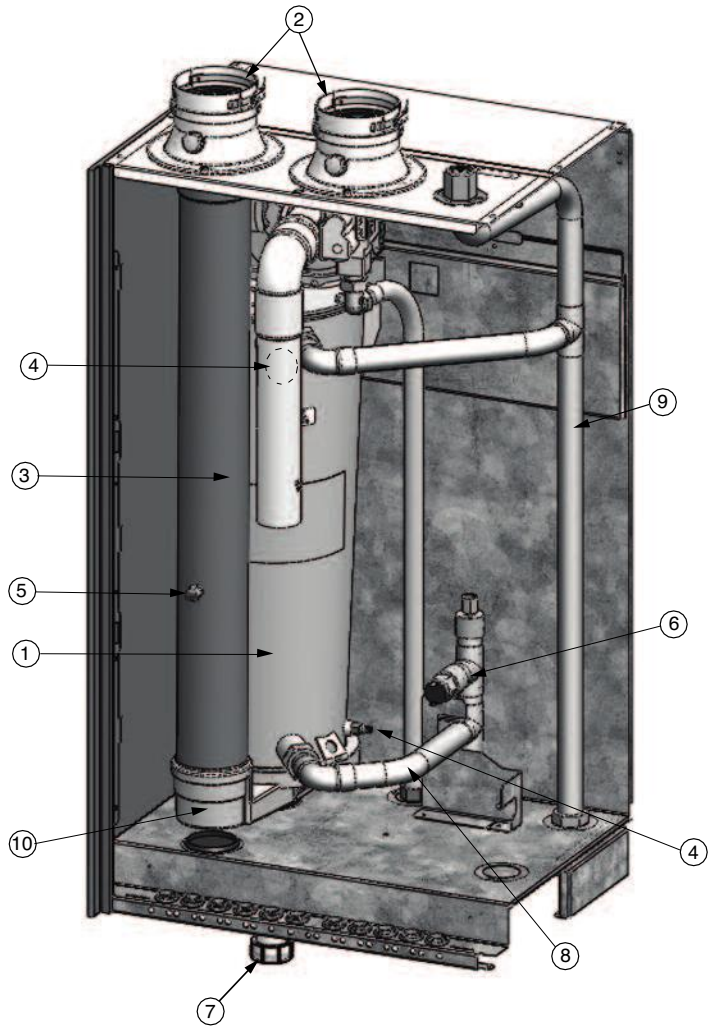

Fig. 7: PRESTIGE Solo 60 Internal Components

Item	Part #	Description
1	PTRKIT125	Heat Exchanger Body
2	PTADPT07	Vent Outlet/ Combustion Air Inlet Adapter
3	PTRKIT115	Polypropylene Vent Pipe
4	PTRKIT122	Supply / Return Temperature Sensor
5	PTRKIT123	Flue Temperature Sensor
6	PGRKIT20	LWCO Pressure Device
7	PSRKIT05	Condensate Drain Assembly
8	PSRKIT06	Boiler Piping - Return Assembly
9	PSRKIT52	Boiler Piping - Supply Assembly
10	PTRKIT119	Polypropylene Condensate Pan

Reviewed for Code Compliance
Inspections Division
Approved with Conditions
Date: 01/29/15

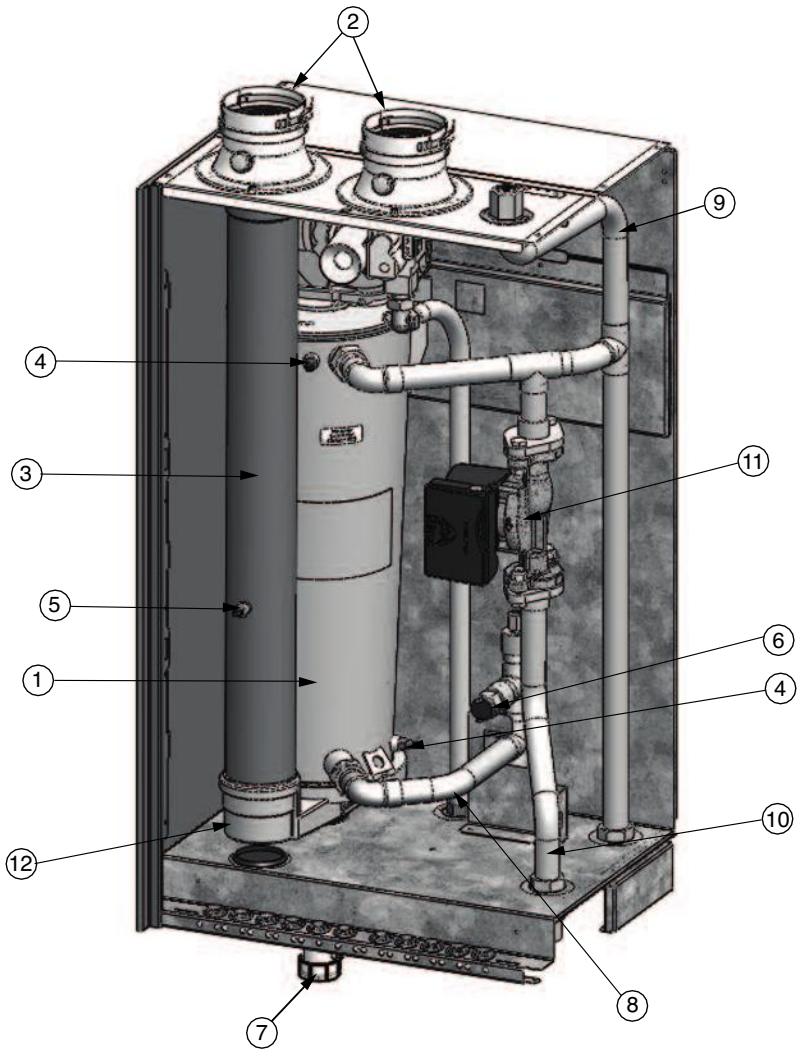

Fig. 8: PRESTIGE Solo 110 Internal Components

Item	Part #	Description
1	PTRKIT124	Heat Exchanger Body - Natural
	PTRKIT125	Heat Exchanger Body - Propane
2	PTADPT07	Vent Outlet/ Combustion Air Inlet Adapter
3	PTRKIT115	Polypropylene Vent Pipe
4	PTRKIT122	Supply / Return Temperature Sensor
5	PTRKIT123	Flue Temperature Sensor
6	PGRKIT20	LWCO Pressure Device
7	PSRKIT05	Condensate Drain Assembly
8	PSRKIT06	Boiler Piping - Return Assembly
9	PSRKIT08	Boiler Piping - Supply Long Assembly
10	PSRKIT07	Boiler Piping - Supply Short Assembly
11	HMCIR01	Circulator
12	PTRKIT119	Polypropylene Condensate Pan

Reviewed for Code Compliance
Inspections Division
Approved with Conditions
Date: 01/29/15

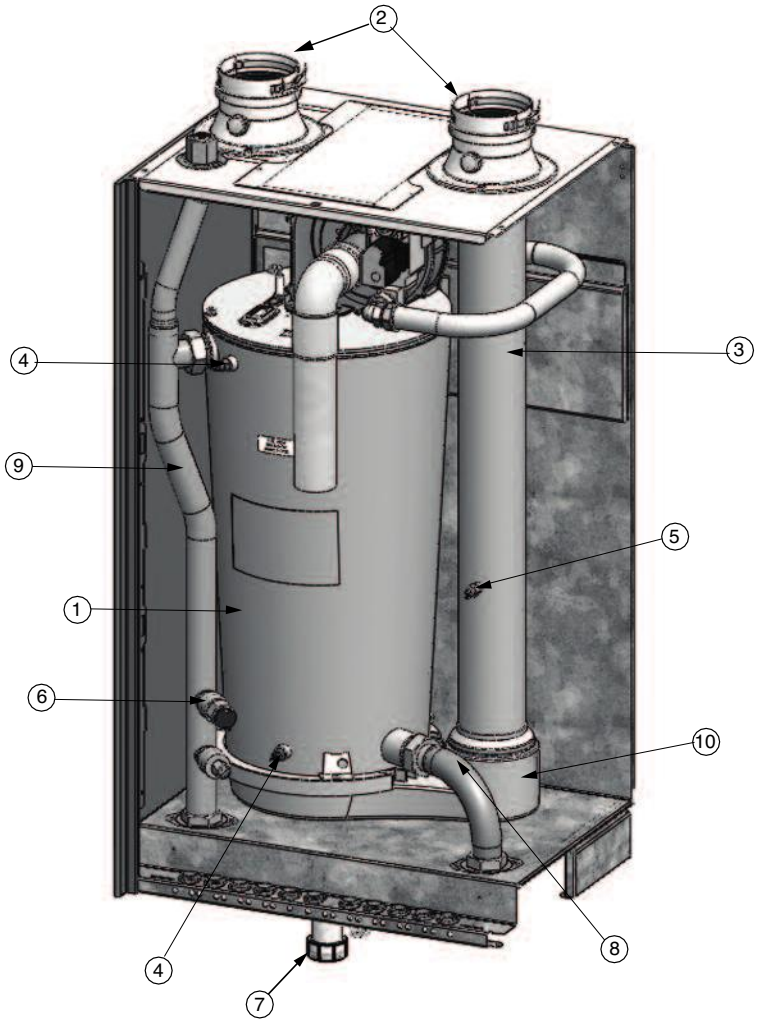

Fig. 9: PRESTIGE Solo 175/250 Internal Components

Item	Part #	Description
1	PSRKIT25	Heat Exchanger Body Solo 175
	PSRKIT26	Heat Exchanger Body Solo 250
2	PTADPT07	Vent Outlet/ Combustion Air Inlet Adapter
3	PTRKIT116	Polypropylene Vent Pipe
4	PTRKIT122	Supply / Return Temperature Sensor
5	PTRKIT123	Flue Temperature Sensor
6	PGRKIT20	LWCO Pressure Device
7	PSRKIT05	Condensate Drain Assembly
8	PSRKIT28	Boiler Piping - Return Assembly
9	PSRKIT29	Boiler Piping - Supply Assembly
10	PTRKIT120	Polypropylene Condensate Pan

Reviewed for Code Compliance
Inspections Division
Approved with Conditions
Date: 01/29/15

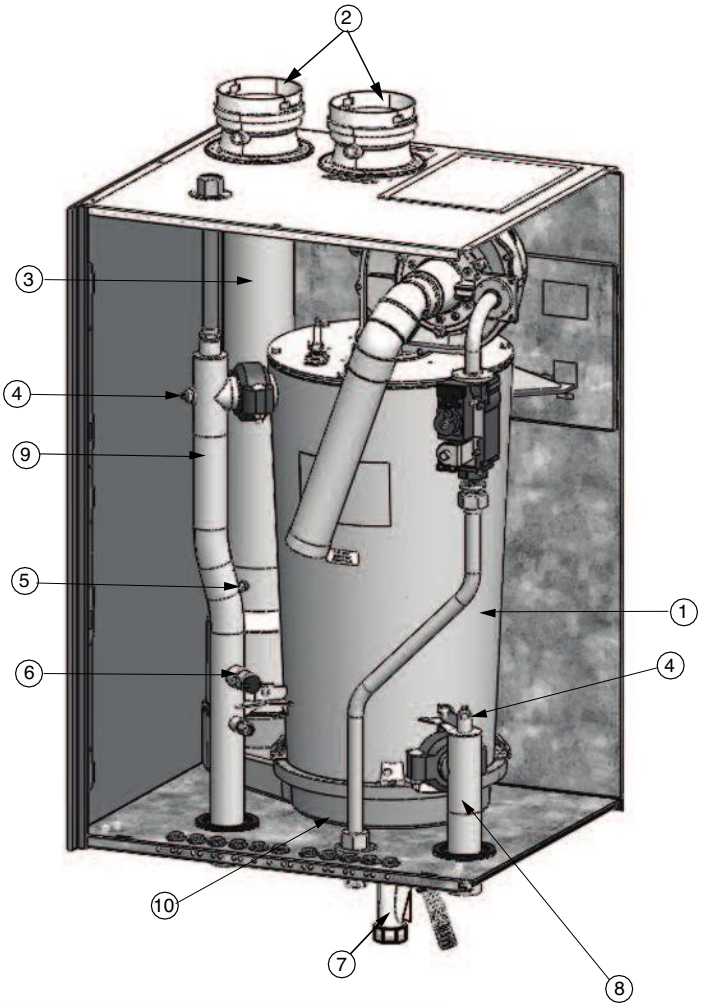

Fig. 10: PRESTIGE Solo 399 Internal Components

Item	Part #	Description
1	PSRKIT44	Heat Exchanger Body (30 PSI)
	PTRKIT128	Heat Exchanger Body (80 PSI)
2	PTADPT08	Vent Outlet/ Combustion Air Inlet Adapter
3	PTRKIT117	Polypropylene Vent Pipe
4	PSRKIT47	Supply / Return Temperature Sensor
5	PTRKIT123	Flue Temperature Sensor
6	PGRKIT20	LWCO Pressure Device
7	PSRKIT05	Condensate Drain Assembly
8	PSRKIT48	Boiler Piping - Return Assembly
9	PSRKIT49	Boiler Piping - Supply Assembly
10	PTRKIT121	Polypropylene Pan

Reviewed for Code Compliance
Inspections Division
Approved with Conditions
Date: 01/29/15

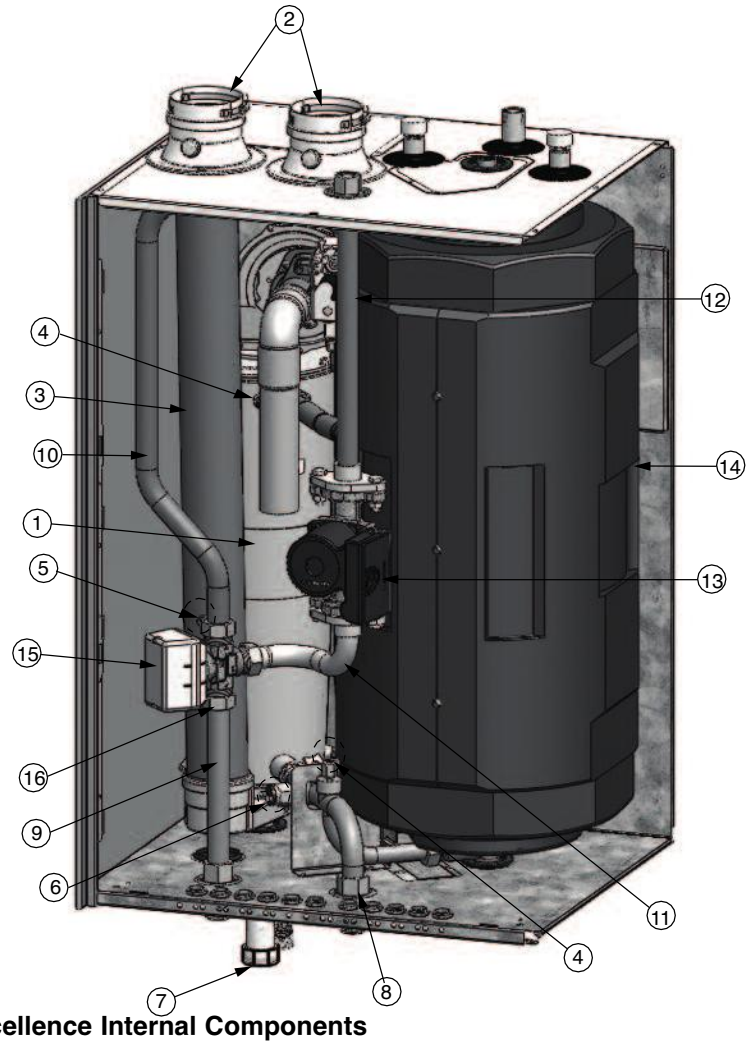

Fig. 11: PRESTIGE Excellence Internal Components

Item	Part #	Description
1	PTRKIT124	Heat Exchanger Body - Natural
	PTRKIT125	Heat Exchanger Body - Propane
2	PTADPT07	Vent Outlet/ Combustion Air Inlet Adapter
3	PTRKIT118	Polypropylene Vent Pipe
4	PTRKIT122	Supply / Return Temperature Sensor
5	PTRKIT123	Flue Temperature Sensor
6	PGRKIT20	LWCO Pressure Device
7	PSRKIT05	Condensate Drain Assembly
8	PSRKIT59	Boiler Piping - Return Assembly
9	PSRKIT60	Boiler Piping - Supply Outlet Assembly
10	PSRKIT61	Boiler Piping - Supply Long Assembly
11	PSRKIT54	Boiler Piping - Supply Short Assembly
12	PSRKIT62	Boiler Piping - Relief Valve Assembly
13	HMCIR01	Circulator
14	PSRKIT56	EXCELLENCE Water Heater Tank
15	PSRKIT57	Valve Actuator
16	PEVLV01	Valve Body

Reviewed for Code Compliance
Inspections Division
Approved with Conditions
Date: 01/29/15

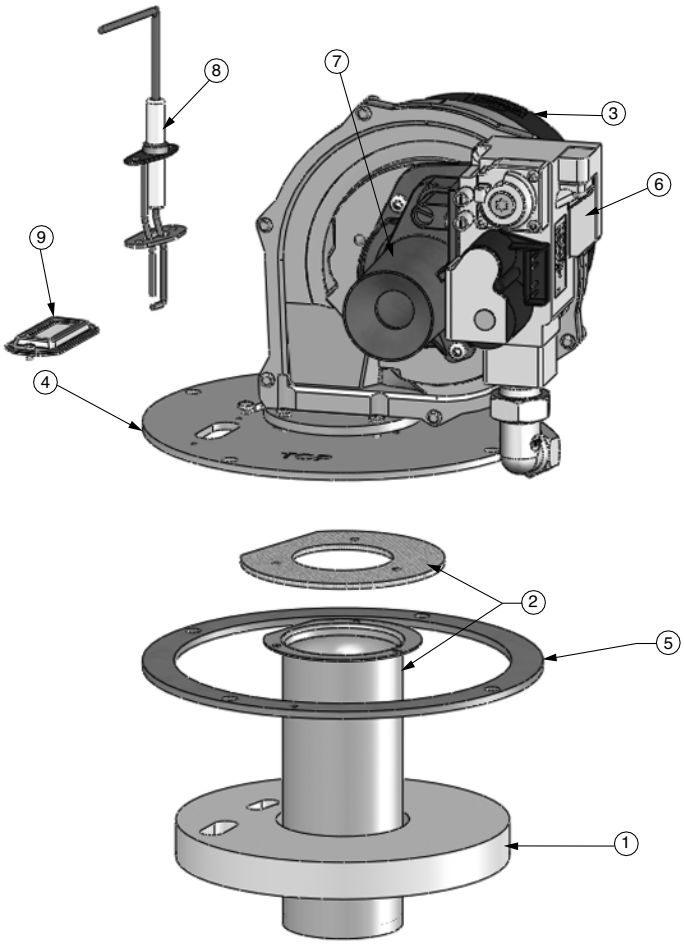

Fig. 12: PRESTIGE Solo 60/175/250 Burner Components

Item	Part # PRESTIGE Solo 60	Part # PRESTIGE Solo 175-250	Description
1	PSRKIT09	PSRKIT30	Combustion Chamber Insulation
2	PSRKIT11	PSRKIT31	Burner Head with Gasket
3	PTRKIT114	PSRKIT13	Blower with Gasket
4	PSRKIT12	PSRKIT32	Burner Plate
5	PSGSK15	PSGSK16	Burner Plate Gasket
6	PTRKIT111		Gas Valve
7	PSRKIT80		Venturi - 055 Solo 60
	PSRKIT82		Venturi - 052 Solo 175
	PSRKIT83		Venturi - 051 Solo 250
8	PTRKIT313		Igniter and Cable with Gasket
9	PSRKIT16		Sight Glass Assembly (Glass, Gasket and Bracket)

Reviewed for Code Compliance
Inspections Division
Approved with Conditions
Date: 01/29/15

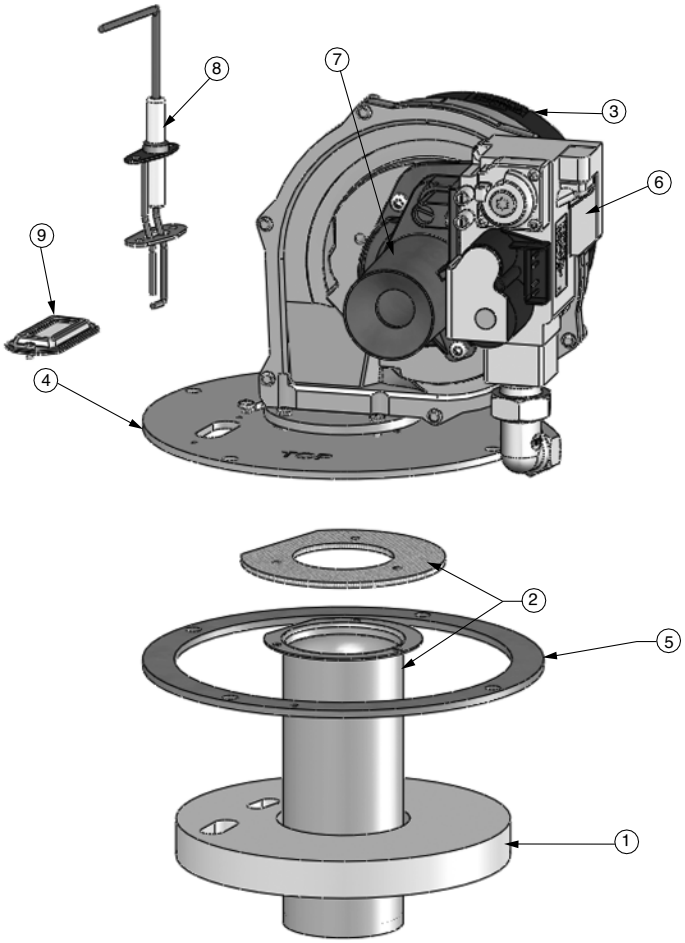

Fig. 13: PRESTIGE Solo 110 / Excellence Burner Components

Item	Part #	Description
1	PSRKIT09	Combustion Chamber Insulation
2	PSRKIT10	Burner Head with Gasket - Natural
	PSRKIT11	Burner Head with Gasket - Propane
3	PTRKIT114	Blower with Gasket
4	PSRKIT12	Burner Plate
5	PSGSK15	Burner Plate Gasket
6	PTRKIT111	Gas Valve
7	PSRKIT81	Venturi - 002
8	PTRKIT313	Igniter and Cable with Gasket
9	PSRKIT16	Sight Glass Assembly (Glass, Gasket and Bracket)

Reviewed for Code Compliance
Inspections Division
Approved with Conditions
Date: 01/29/15

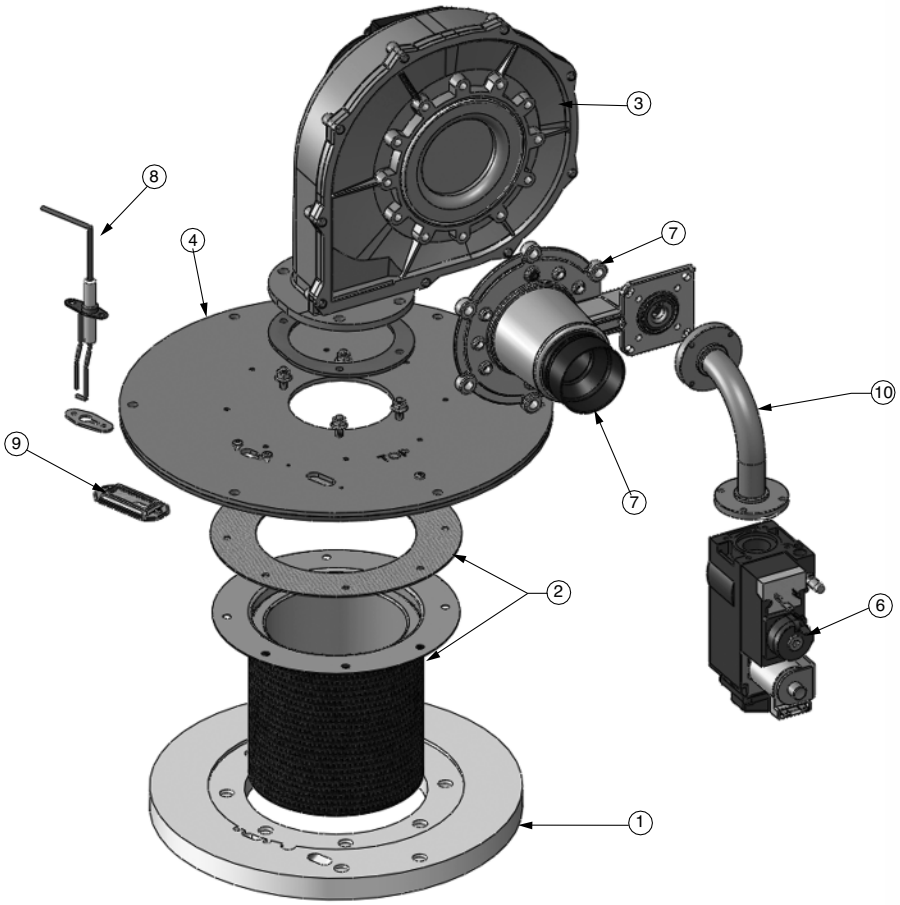

Fig. 14: PRESTIGE Solo 399 Burner Components

Item	Part #	Description
1	PSRKIT37	Combustion Chamber Insulation
2	PSRKIT38	Burner Head with Gasket
3	PSRKIT40	Blower with Gasket
4	PSRKIT39	Burner Plate
5	PSGSK17	Burner Plate Gasket (Not Shown)
6	PTRKIT112	Gas Valve
7	PSRKIT84	Venturi
8	PTRKIT313	Igniter and Cable with Gasket
9	PSRKIT16	Sight Glass Assembly (Glass, Gasket and Bracket)
10	PSRKIT42	Gas Valve Piping

Reviewed for Code Compliance
Inspections Division
Approved with Conditions
Date: 01/29/15

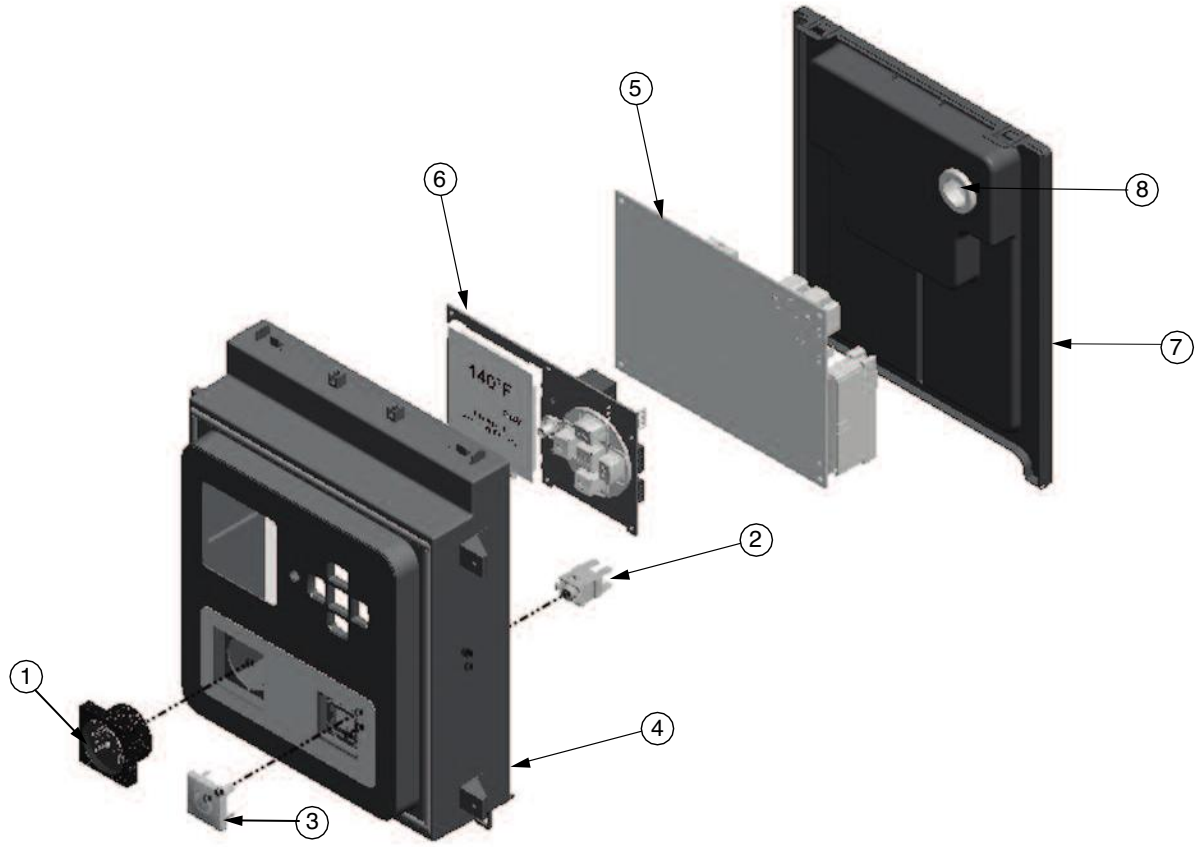

Fig. 15: PRESTIGE Control Enclosure

Item	Part #	Description
1	PTRKIT109	Pressure Gauge and Fitting (All except Solo 399)
	PTRKIT110	Pressure Gauge and Fitting (Solo 399)
2	PTSWI01	Power Switch
3	PTSWI02	Power Switch Cover
4	PTRKIT108	Control Enclosure
5	PTRKIT205	TriMax Control Module (Solo 60, 110 &175, Excellence)
	PTRKIT206	TriMax Control Module (Solo 250 & 399)
6	PTRKIT207	TriMax Display Module
7	PTCON19	Control Enclosure Cover
8	PTGRO01	Igniter Cable Grommet
9	PTFUSE02	TriMax Control Module 5A Fuse (Not Shown)
10	PTFUSE01	Circulator 2.5A Fuses (Not Shown)
11	PTFUSE03	In-Line Voltage 8A Fuse (Not Shown)

Reviewed for Code Compliance
Inspections Division
Approved with Conditions
Date: 01/29/15

Additional quality water heating equipment available from ACV- Triangle Tube

Brazed Plate Heat Exchangers

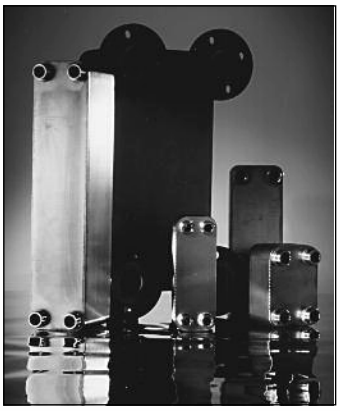

- For domestic water, snow melting, radiant floor, refrigeration
- Plates made of stainless steel, with a 99.9 % copper and brazed, ensuring a high resistance to corrosion
- Self cleaning and self descaling
- Computerized sizing available from ACV-Triangle Tube
- Available in capacities from 25,000 BTU/hr to 5,000,000 BTU/hr

Phase III Indirect Fired Water Heaters

- Exclusive “tank-in-tank” design
- Stainless steel construction
- Available in 7 sizes
- Limited LIFETIME residential warranty
- 6 year limited commercial warranty
- Self cleaning/self descaling design

Maxi-flo Pool and Spa Heat Exchangers

- Constructed of high quality corrosion resistant stainless steel (AISI 316)
- Specially designed built-in flow restrictor to assure maximum heat exchange
- Compact and light weight
- Available in 8 sizes that can accommodate any size pool or spa

Triangle Tube -Freeway Center - 1 Triangle Lane -Blackwood, NJ 08012
Tel: (856) 228 8881 - Fax: (856) 228 3584 -E-mail: Sales@triangletube.com