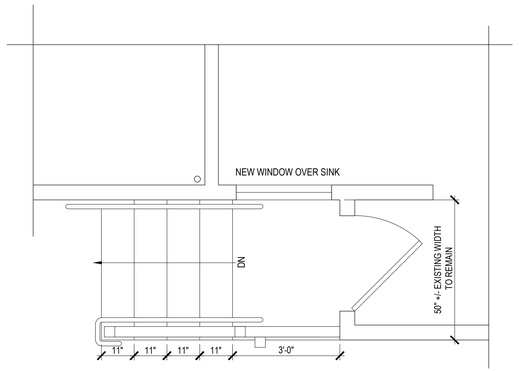

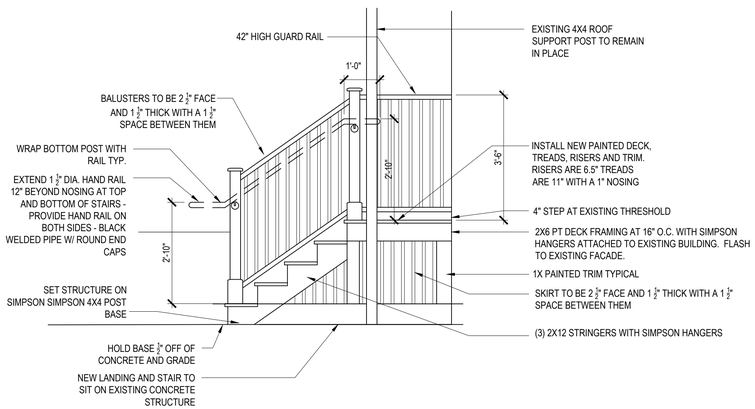

1 NEW STAIR AT REAR OF THE HOUSE

SCALE: 1/4"=1'-0"

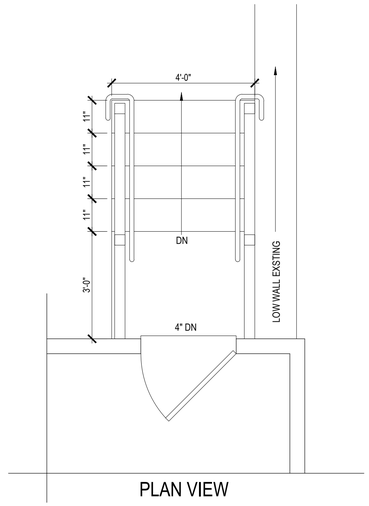

PLAN VIEW

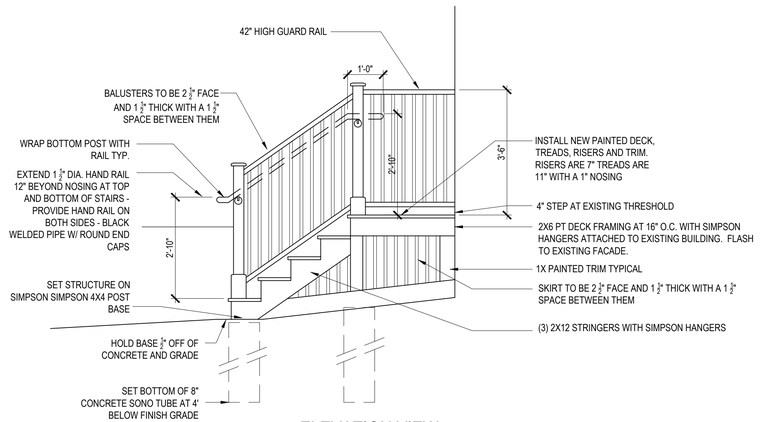

ELEVATION VIEW

2 NEW EGRESS STAIR AT FRONT OF HOUSE

SCALE: 3/4"=1'-0"

ENVELOPE
ARCHITECTURE & CONSULTING
ARCHITECTURE - BUILDING ENVELOPE DESIGN CONSULTING, INVESTIGATION AND COMMISSIONING - WINDHAM, ME
207-807-6661

LICENSED ARCHITECT
DAVID P. DOUGLASS
NO. 3000
STATE OF MAINE

84 HIGH STREET

RESIDENTIAL APARTMENTS REMODEL

PORTLAND, MAINE 04101

ENLARGED STAIR

REVISIONS

09-19-2017 - ISSUED FOR PERMIT
11-22-2017 - UPDATED FOR PERMIT
12-01-2017 - UPDATED FOR PERMIT
12-06-2017 - UPDATED FOR PERMIT

SCALE:	AS NOTED
09-19-17	84 HIGH

A2.5

© ENVELOPE ARCHITECTURE & CONSULTING 2017 – ALL RIGHTS RESERVED