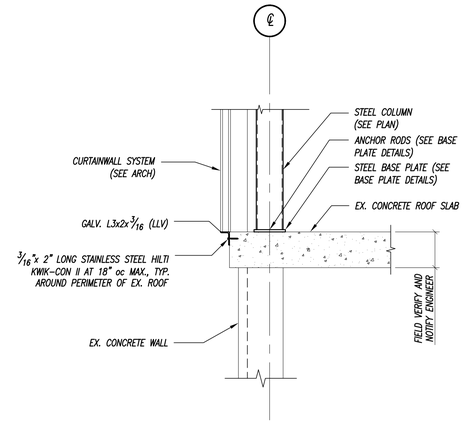

1 SECTION
3/4" = 1'-0"

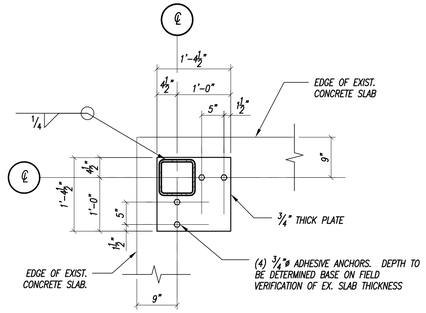

BP-1

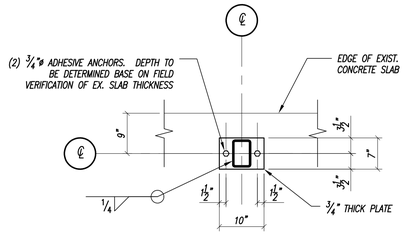

BP-2

2 BASE PLATE DETAILS
3/4" = 1'-0"

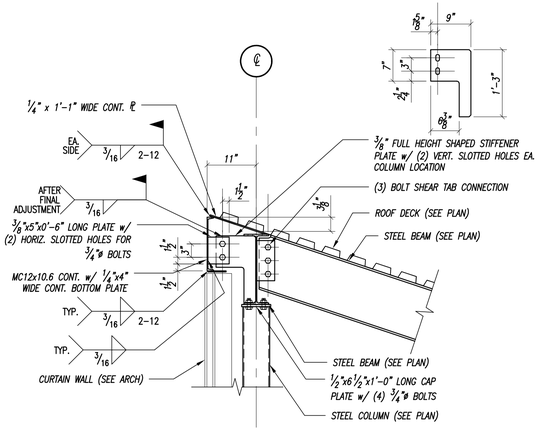

3 SECTION
3/4" = 1'-0"

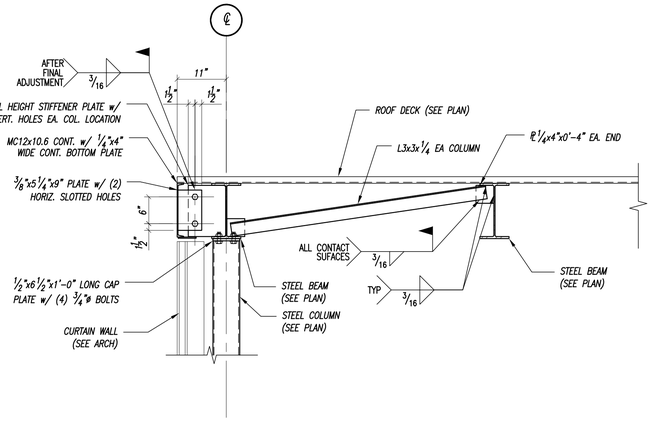

4 SECTION
3/4" = 1'-0"

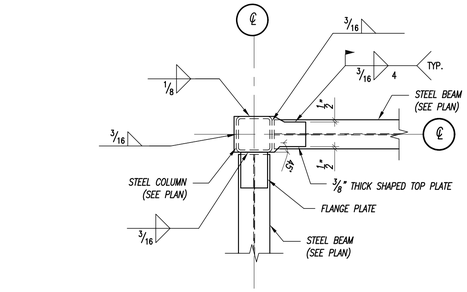

SECTION A-A

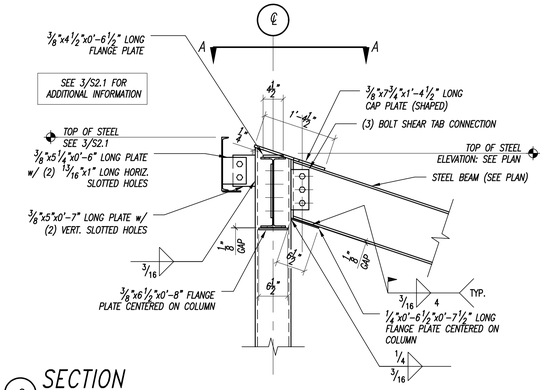

8 SECTION
3/4" = 1'-0"

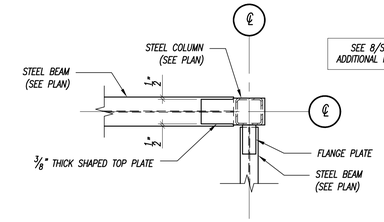

SECTION B-B

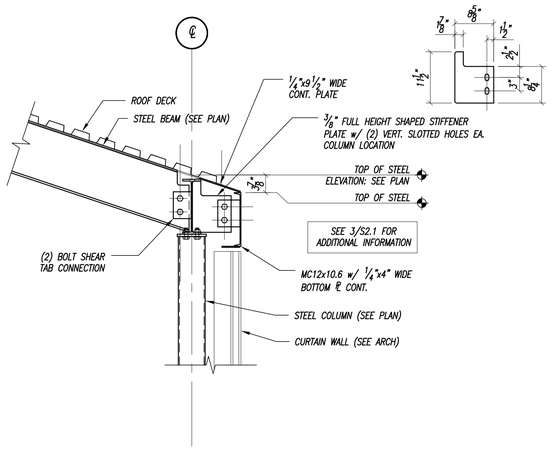

5 SECTION
3/4" = 1'-0"

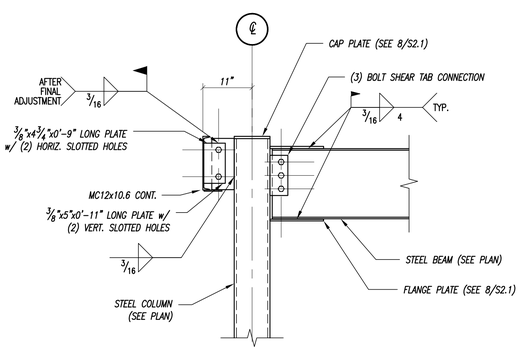

6 SECTION
3/4" = 1'-0"

CONNECTION SCHEDULE

MINIMUM NUMBER OF 3/4" dia. A325-N BOLTS	MINIMUM PLATE LENGTH
2	6
3	9

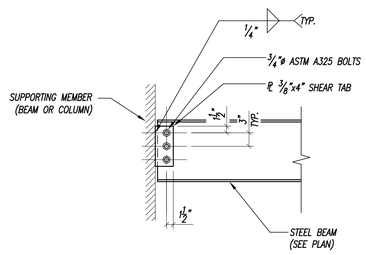

7 TYPICAL BEAM TO HSS COLUMN CONNECTION
3/4" = 1'-0"

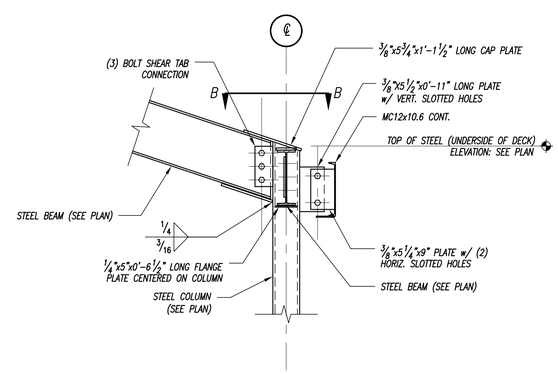

9 SECTION
3/4" = 1'-0"

STATE OF MAINE
MATTHEW J. MILLER
No. 11286
LICENSED
PROFESSIONAL ENGINEER
Date: 10/27/17

Reviewed for Code Compliance
Inspection Division
Bangor Code Enforcement

Prepared For:
LAFAYETTE PROPERTIES, LLC
155 LITTLEFIELD STREET
BANGOR, MAINE 04401

Consultant:
Building Envelope Specialists
ROBERT GUSTAVSEN ASSOCIATES
PO BOX 2288, S.PORTLAND, MAINE 04116
PHONE: 207-400-0084

23 Thornbury Way
Windham, ME 04062
(207)892-6600
www.m2bse.com

M2 STRUCTURAL ENGINEERING, P.C.

Architect:
ARCHETYPE Architects
48 Union Wharf Portland, Maine 04101
(207) 772-6022 ARCHETYPE@ARCHETYPEPA.COM

Project:
Holiday Inn
88 Spring Street
Portland, ME

Revisions:

Scale: AS NOTED

Date: JUNE 30, 2017

SECTIONS AND DETAILS

S2.1