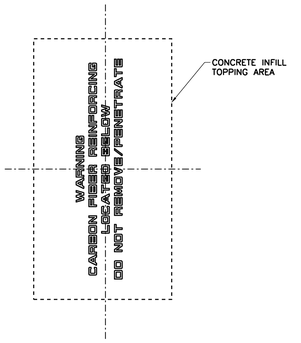

DETAIL AT SLAB LABELING | 1/4" = 1'-0" | 0 2' 4' 6' | REF: – | B3

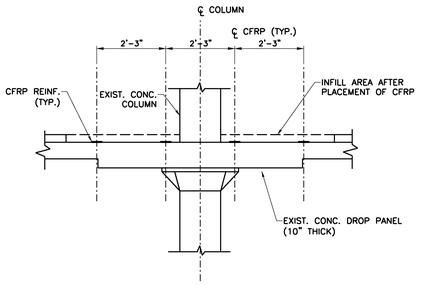

SECTION AT CFRP REINFORCING | 1/2" = 1'-0" | 0 1' 2' 3' | REF: – | B2

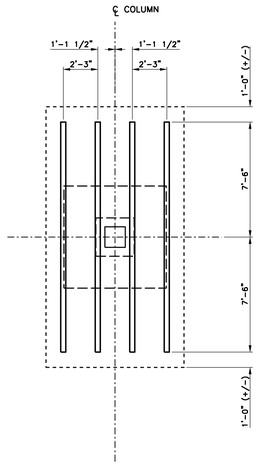

PLAN AT CFRP REINFORCING | 1/4" = 1'-0" | 0 2' 4' 6' | REF: – | B1

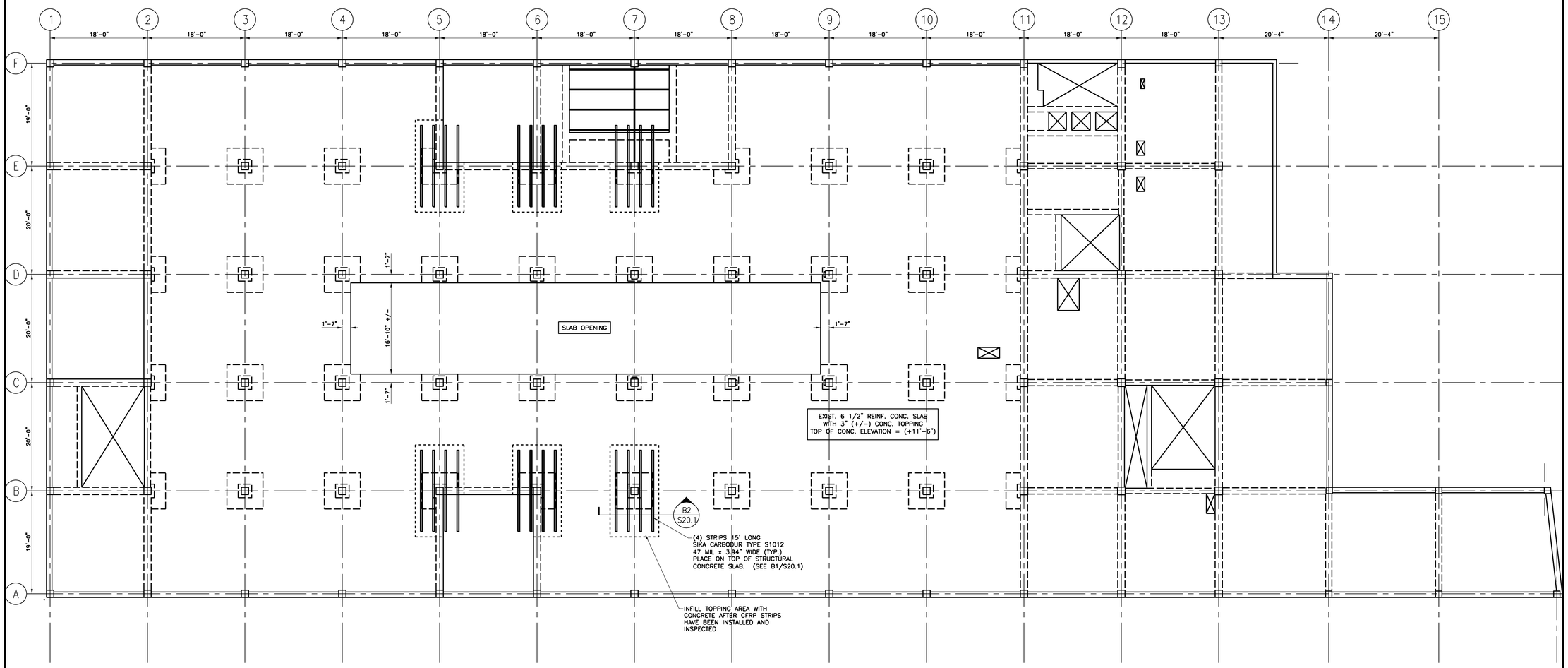

1ST FLOOR FRAMING PLAN | 1/8" = 1'-0" | 0 4' 8' 12' | REF: – | A1

HARRIMAN
Architects + Engineers
46 Harriman Drive
Auburn, ME 04210
207.784.5100 tel

123 Middle Street
Portland, ME 04101
207.775.0053 tel

One Perimeter Road
Manchester, NH 03103
603.626.1242 tel

www.harriman.com

© 2009

STATE OF MAINE
B. KEITH BRENNER
No. 8157
PROFESSIONAL ENGINEER

Project Title

110 FREE STREET BUILDING RENOVATIONS

PORTLAND, MAINE

HA Project No. 09146

Key Plan

GENERAL NOTES:

1. TOP OF CONCRETE ELEVATIONS REFERENCED FROM FINISH GROUND FLOOR ELEVATION (+0'-0")
2. SLAB OPENINGS SHALL NOT BE SAWCUT UNTIL ALL CFRP REINFORCING HAS BEEN INSTALLED.

CFRP NOTES:

1. CFRP (CARBON FIBER REINFORCED POLYMER) SHALL BE 47.2 MIL x 3.94" WIDE STRIPS AS MANUFACTURED BY SIKA CORPORATION (TYPE S1012)
2. DESIGN VALUE TENSILE STRENGTH = 4.06x10^5 PSI
3. CLEAN AND PREPARE CONCRETE SURFACE PER MANUFACTURER RECOMMENDATIONS
4. CFRP SHALL BE INSTALLED BY A LICENSED INSTALLER HAVING EXPERIENCE WITH THE PRODUCTS
5. INSTALL CFRP STRIPS IN ACCORDANCE WITH ALL MANUFACTURER RECOMMENDATIONS
6. PAINT WARNING LABEL AT EACH REINFORCING LOCATION AS SHOWN ON B3/S20.1

Mark	Date	Description
	12/11/2009	ISSUED FOR BID

Issue Dates

Drawing Status

STRUCTURAL
ISSUED FOR BID

Drawing Title

1ST FLOOR FRAMING PLAN AND DETAILS

PA / PE: BKB | Drawn By: MRM

Drawing Number

S20.1

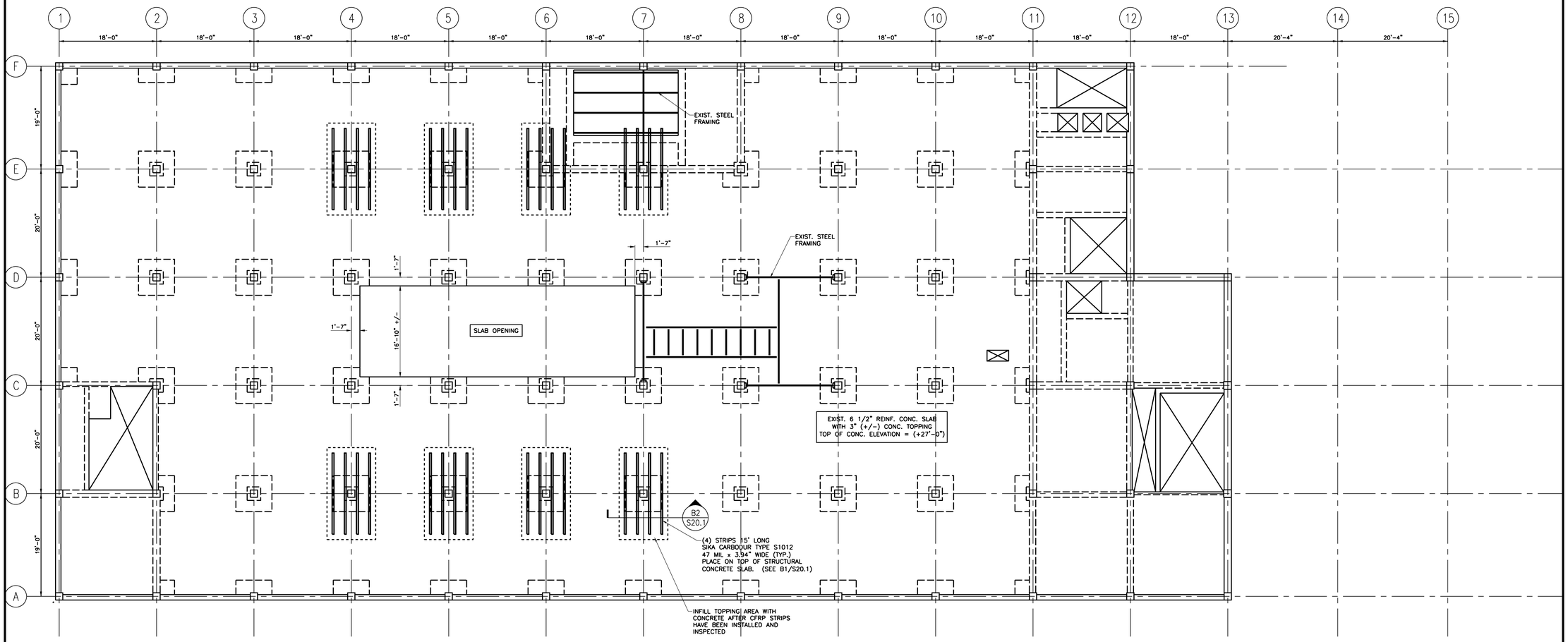

2ND FLOOR FRAMING PLAN

1/8" = 1'-0" | 0 4' 8' 12' | REF: –

A1

HARRIMAN

Architects + Engineers

46 Harriman Drive
Auburn, ME 04210
207.784.5100 tel

123 Middle Street
Portland, ME 04101
207.775.0053 tel

One Perimeter Road
Manchester, NH 03103
603.626.1242 tel

www.harriman.com

© 2009

STATE OF MAINE
B. KEITH BRENNER
No. 8157
PROFESSIONAL ENGINEER

Project Title

110 FREE STREET BUILDING RENOVATIONS

PORTLAND, MAINE

HA Project No. 09146

Key Plan

GENERAL NOTES:

1. TOP OF CONCRETE ELEVATIONS REFERENCED FROM FINISH GROUND FLOOR ELEVATION (+0'-0")
2. SLAB OPENINGS SHALL NOT BE SAWCUT UNTIL ALL CFRP REINFORCING HAS BEEN INSTALLED.

CFRP NOTES:

1. CFRP (CARBON FIBER REINFORCED POLYMER) SHALL BE 47.2 MIL x 3.94" WIDE STRIPS AS MANUFACTURED BY SIKA CORPORATION (TYPE S1012)
2. DESIGN VALUE TENSILE STRENGTH = 4.06x10^5 PSI
3. CLEAN AND PREPARE CONCRETE SURFACE PER MANUFACTURER RECOMMENDATIONS
4. CFRP SHALL BE INSTALLED BY A LICENSED INSTALLER HAVING EXPERIENCE WITH THE PRODUCTS
5. INSTALL CFRP STRIPS IN ACCORDANCE WITH ALL MANUFACTURER RECOMMENDATIONS
6. PAINT WARNING LABEL AT EACH REINFORCING LOCATION AS SHOWN ON B3/S20.1

Mark	Date	Description
	12/11/2009	ISSUED FOR BID

Issue Dates

Drawing Status

STRUCTURAL
ISSUED FOR BID

Drawing Title

2ND FLOOR FRAMING PLAN

PA / PE: BKB | Drawn By: MRM

Drawing Number

S20.2

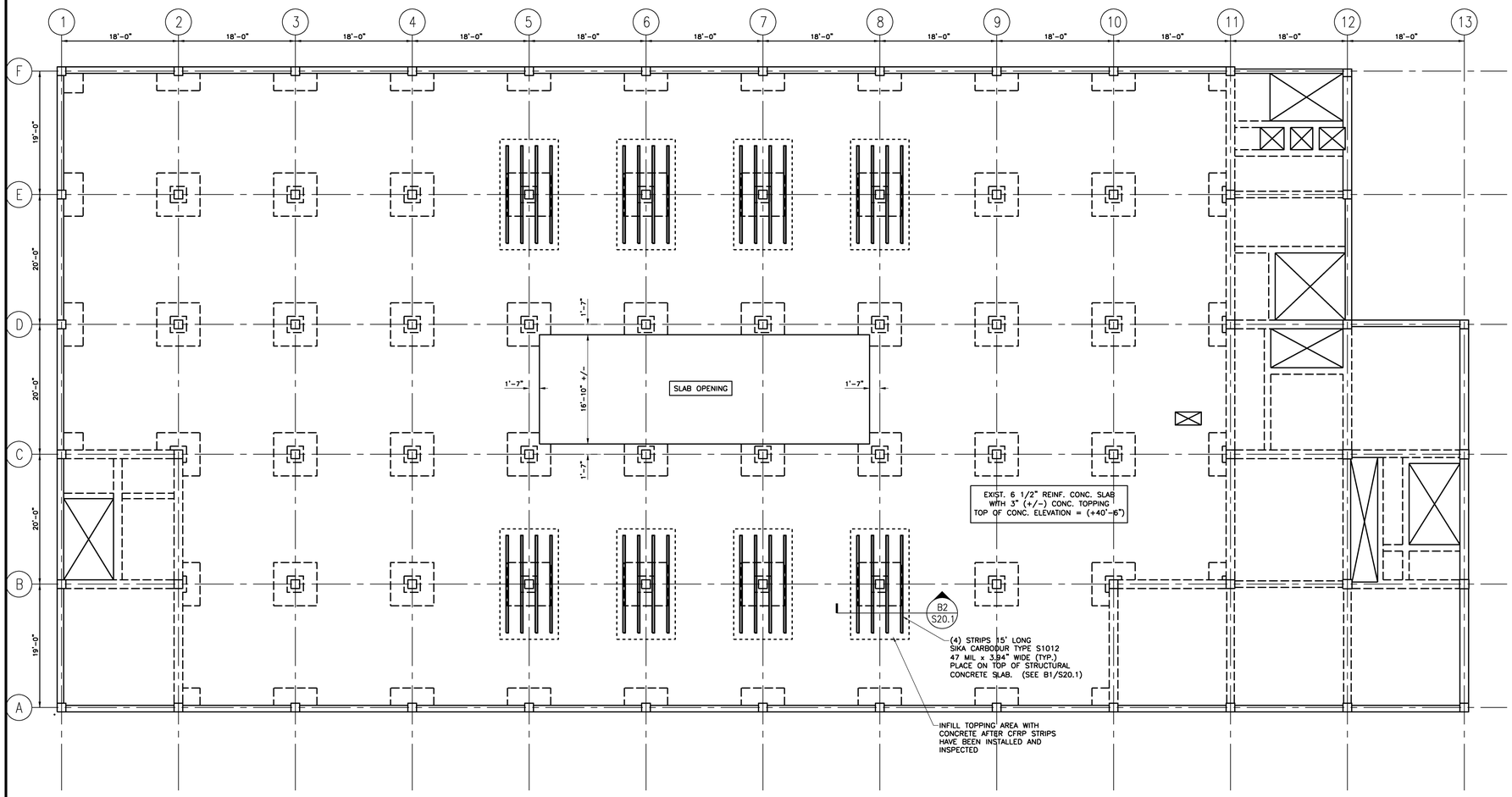

3RD FLOOR FRAMING PLAN

1/8" = 1'-0" | 0 4' 8' 12' | REF: -

A1

HARRIMAN
Architects + Engineers

46 Harriman Drive
Auburn, ME 04210
207.784.5100 tel

123 Middle Street
Portland, ME 04101
207.775.0053 tel

One Perimeter Road
Manchester, NH 03103
603.626.1242 tel

www.harriman.com

© 2009

STATE OF MAINE
B. KEITH BRENNER
No. 8157
PROFESSIONAL ENGINEER

Project Title

110 FREE STREET BUILDING RENOVATIONS

PORTLAND, MAINE

HA Project No. 09146

Key Plan

GENERAL NOTES:

1. TOP OF CONCRETE ELEVATIONS REFERENCED FROM FINISH GROUND FLOOR ELEVATION (+0'-0")
2. SLAB OPENINGS SHALL NOT BE SAWCUT UNTIL ALL CFRP REINFORCING HAS BEEN INSTALLED.

CFRP NOTES:

1. CFRP (CARBON FIBER REINFORCED POLYMER) SHALL BE 47.2 MIL x 3.94" WIDE STRIPS AS MANUFACTURED BY SIKA CORPORATION (TYPE S1012)
2. DESIGN VALUE TENSILE STRENGTH = 4.06x10^5 PSI
3. CLEAN AND PREPARE CONCRETE SURFACE PER MANUFACTURER RECOMMENDATIONS
4. CFRP SHALL BE INSTALLED BY A LICENSED INSTALLER HAVING EXPERIENCE WITH THE PRODUCTS
5. INSTALL CFRP STRIPS IN ACCORDANCE WITH ALL MANUFACTURER RECOMMENDATIONS
6. PAINT WARNING LABEL AT EACH REINFORCING LOCATION AS SHOWN ON B3/S20.1

Mark	Date	Description
	12/11/2009	ISSUED FOR BID

Issue Dates

Drawing Status

STRUCTURAL
ISSUED FOR BID

Drawing Title

3RD FLOOR
FRAMING PLAN

PA / PE: BKB | Drawn By: MRM

Drawing Number

S20.3

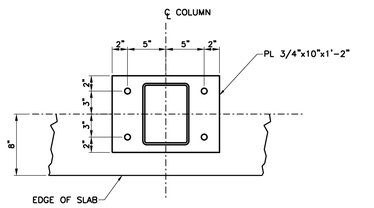

PLAN AT COLUMN BASE | 1 1/2" = 1'-0" | REF: – | B4

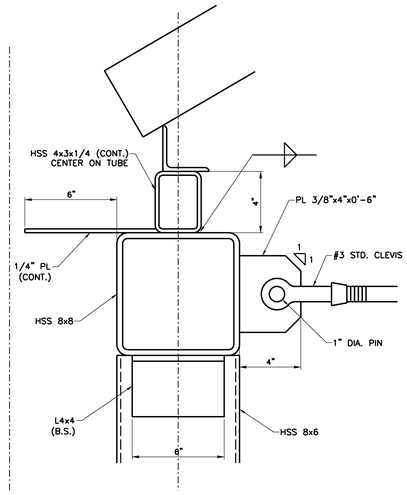

SECTION AT TOP TUBE | 3" = 1'-0" | REF: – | B3

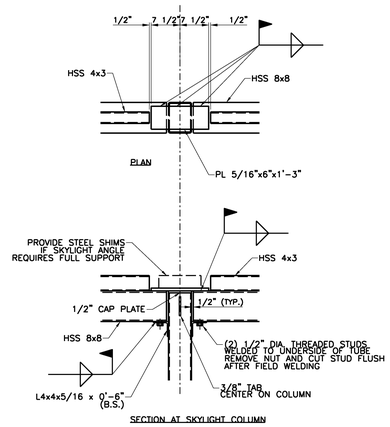

DETAILS AT SKYLIGHT COLUMN | 3/4" = 1'-0" | REF: – | B2

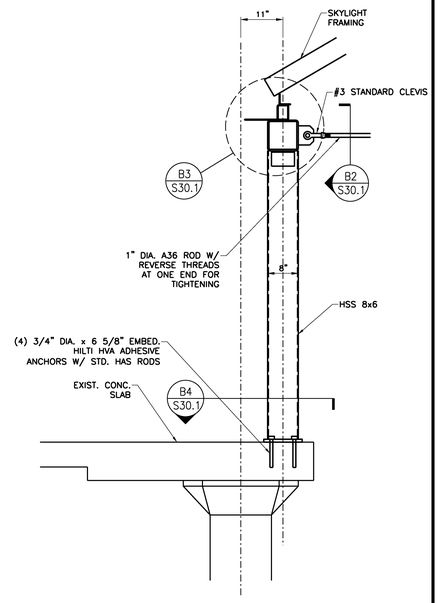

SECTION AT SKYLIGHT | 3/4" = 1'-0" | REF: – | B1

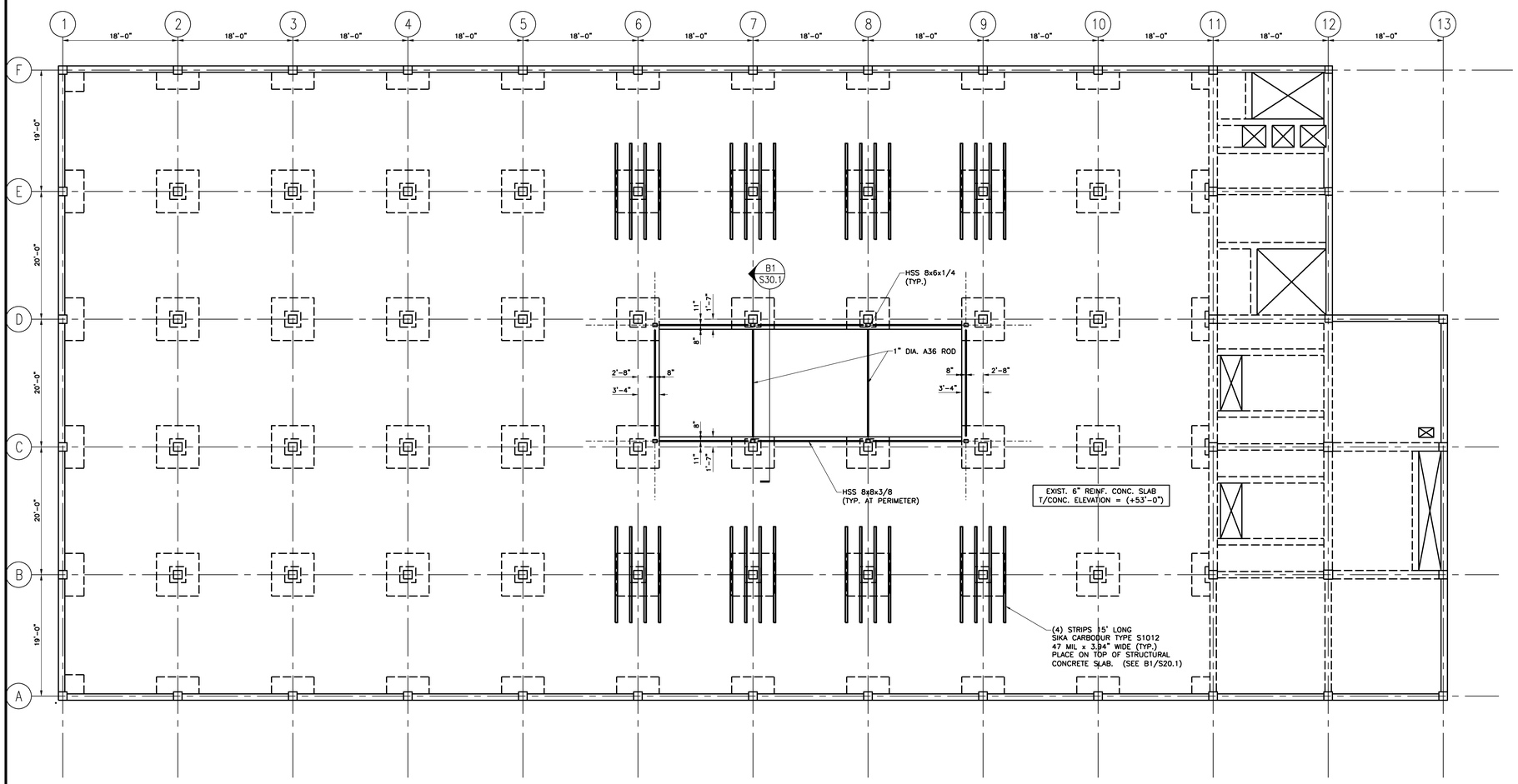

ROOF FRAMING PLAN | 1/8" = 1'-0" | REF: – | A1

HARRIMAN
Architects + Engineers
46 Harriman Drive
Auburn, ME 04210
207.784.5100 tel
123 Middle Street
Portland, ME 04101
207.775.0053 tel
One Perimeter Road
Manchester, NH 03103
603.626.1242 tel
www.harriman.com

© 2009

STATE OF MAINE
B. KEITH BRENNER
No. 8157
PROFESSIONAL ENGINEER

Project Title

110 FREE STREET BUILDING RENOVATIONS

PORTLAND, MAINE

HA Project No. 09146

Key Plan

GENERAL NOTES:

1. TOP OF CONCRETE ELEVATIONS REFERENCED FROM FINISH GROUND FLOOR ELEVATION (+0'-0")
2. SLAB OPENINGS SHALL NOT BE SAWCUT UNTIL ALL CFRP REINFORCING HAS BEEN INSTALLED.
3. ALL STEEL TUBES SHALL CONFORM TO ASTM A500 GR. B (Fy = 46 KSI)

CFRP NOTES:

1. CFRP (CARBON FIBER REINFORCED POLYMER) SHALL BE 47.2 MIL x 3.94" WIDE STRIPS AS MANUFACTURED BY SIKA CORPORATION (TYPE S1012)
2. DESIGN VALUE TENSILE STRENGTH = 4.06x10^5 PSI
3. CLEAN AND PREPARE CONCRETE SURFACE PER MANUFACTURER RECOMMENDATIONS
4. CFRP SHALL BE INSTALLED BY A LICENSED INSTALLER HAVING EXPERIENCE WITH THE PRODUCTS
5. INSTALL CFRP STRIPS IN ACCORDANCE WITH ALL MANUFACTURER RECOMMENDATIONS
6. PAINT WARNING LABEL AT EACH REINFORCING LOCATION AS SHOWN ON B3/S20.1

Mark	Date	Description
	12/11/2009	ISSUED FOR BID

Issue Dates

Drawing Status

STRUCTURAL
ISSUED FOR BID

Drawing Title

ROOF FRAMING PLAN AND DETAILS

PA / PE: BKB | Drawn By: MRM

Drawing Number

S30.1