City of Portland, Maine - Building or Use Permit
389 Congress Street, 04101 Tel: (207) 874-8703, Fax: (207) 874-8716

Permit No:	Date Applied For:	CBL:
10-1316	10/20/2010	039 C001001

Location of Construction:	Owner Name:	Owner Address:	Phone:
110 FREE ST	MAINEHEALTH	465 CONGRESS ST STE 600	
Business Name:	**Contractor Name:**	**Contractor Address:**	**Phone**
	Johnson & Jordan	18 Mussey Road Scarborough	(207) 883-8345
Lessee/Buyer's Name	**Phone:**	**Permit Type:**	
		HVAC	

Proposed Use:	Proposed Project Description:
Maine Health Office - Install Floor and Roof Variable Refrigerant Volume A/C ventilation Fans	Install Floor and Roof Variable Refrigerant Volume A/C ventilation Fans

Dept: Zoning **Status:** Approved with Conditions **Reviewer:** Marge Schmuckal **Approval Date:** 10/21/2010
Note: **Ok to Issue:** ☑

1) The HVAC units SHALL meet the required maximum noise limitations of the B-3 Zone. Any noise complaints are vigorously enforced. Any noise levels that exceed the maximum allowances shall be mitigated as approved by this office

Dept: Building **Status:** Approved with Conditions **Reviewer:** Jeanine Bourke **Approval Date:**
Note: **Ok to Issue:** ☐

1) Equipment must be installed in compliance with the UL listing and the manufacturer's specifications

Dept: Fire **Status:** Approved with Conditions **Reviewer:** Capt Keith Gautreau **Approval Date:** 10/26/2010
Note: **Ok to Issue:** ☑

1) Install shall comply with NFPA 90B.

2) Install shall comply with all manufacture's specifications.

Comments:

11/5/2010-jmb: Routed from Tammy with review notes

11/9/2010-jmb: Spoke with Tim Hart at Harriman. he confirmed the previous building permit approval included the structural design loads for this equipment.

City of Portland, Maine - Building nr Use Permit

389 Congress Street, 04101 Tel: (207) 874-8703, Fax: (207) 874-8716

Permit No:	Date Applied For:	CBL:
10-1316	10/20/2010	039 C001001

Location of Construction:	Owner Name:	Owner Address:	Phone:
110 FREE ST	MAINEHEALTH	465 CONGRESS ST STE 600	
Business Name:	**Contractor Name:**	**Contractor Address:**	**Phone**
	Johnson & Jordan	18 Mussey Road Scarborough	(207) 883-8345
Lessee/Buyer's Name	**Phone:**	**Permit Type:**	
		HVAC	

Proposed Use:	Proposed Project Description:
Maine Health Office - Install Floor and Roof Variable Refrigerant Volume A/C ventilation Fans	Install Floor and Roof Variable Refrigerant Volume A/C ventilation Fans

Dept: Zoning **Status:** Approved with Conditions **Reviewer:** Marge Schmuckal **Approval Date:** 10/21/2010

Note: **Ok to Issue:** ☑

1) The HVAC units SHALL meet the required maximum noise limitations of the B-3 Zone. Any noise complaints are vigorously enforced. Any noise levels that exceed the maximum allowances shall be mitigated as approved by this office

Dept: Building **Status:** Approved with Conditions **Reviewer:** Jeanine Bourke **Approval Date:**

Note: **Ok to Issue:** ☐

1) Equipment must be installed in compliance with the UL listing and the manufacturer's specifications

Dept: Fire **Status:** Approved with Conditions **Reviewer:** Capt Keith Gautreau **Approval Date:** 10/26/2010

Note: **Ok to Issue:** ☑

1) Install shall comply with NFPA 90B.

2) Install shall comply with all manufacture's specifications.

Comments:

11/5/2010-jmb: Routed from Tammy with review notes

11/9/2010-jmb: Spoke with Tim Hart at Harriman, he confirmed the previous building permit approval included the structural design loads for this equipment.

City of Portland, Maine - Building or Use Permit Application

389 Congress Street, 04101 Tel: (207) 874-8703, Fax: (207) 874-8716

Permit No:	Issue Date:	CBL:
10-1316		039 C001001

Location of Construction:	Owner Name:	Owner Address:	Phone:
110 FREE ST	MAINEHEALTH	465 CONGRESS ST STE 600	
Business Name:	**Contractor Name:**	**Contractor Address:**	**Phone**
	Johnson & Jordan	18 Mussey Road Scarborough	2078838345
Lessee/Buyer's Name	**Phone:**	**Permit Type:**	**Zone:**
		HVAC	B-3

Past Use:	Proposed Use:	Permit Fee:	Cost of Work:	CEO District:
Maine Health Office	Maine Health Office - Install Floor and Roof Variable Refrigerant Volume A/C ventilation Fans	$1,050.00	$103,000.00	1

FIRE DEPT: ☑ Approved ☐ Denied

*See Conditions

Signature: KG

INSPECTION:

Use Group: Type:

Signature:

Proposed Project Description:

Install Floor and Roof Variable Refrigerant Volume A/C ventilation Fans

PEDESTRIAN ACTIVITIES DISTRICT (P.A.D.)

Action: ☐ Approved ☐ Approved w/Conditions ☐ Denied

Signature: Date:

Permit Taken By:	Date Applied For:
ldobson	10/20/2010

1. This permit application does not preclude the Applicant(s) from meeting applicable State and Federal Rules.
2. Building permits do not include plumbing, septic or electrical work.
3. Building permits are void if work is not started within six (6) months of the date of issuance. False information may invalidate a building permit and stop all work..

Zoning Approval

Special Zone or Reviews	Zoning Appeal	Historic Preservation
☐ Shoreland Sand's Noise standards	☐ Variance	☑ Not in District or Landmark
☐ Wetland	☐ Miscellaneous	☐ Does Not Require Review
☐ Flood Zone	☐ Conditional Use	☐ Requires Review
☐ Subdivision	☐ Interpretation	☐ Approved
☐ Site Plan	☐ Approved	☐ Approved w/Conditions
Maj ☐ Minor ☑ MM ☐	☐ Denied	☐ Denied
Date: ok with conditions 10/21/10	Date:	Date:

CERTIFICATION

I hereby certify that I am the owner of record of the named property, or that the proposed work is authorized by the owner of record and that I have been authorized by the owner to make this application as his authorized agent and I agree to conform to all applicable laws of this jurisdiction. In addition, if a permit for work described in the application is issued, I certify that the code official's authorized representative shall have the authority to enter all areas covered by such permit at any reasonable hour to enforce the provision of the code(s) applicable to such permit.

SIGNATURE OF APPLICANT ADDRESS DATE PHONE

FILL IN AND SIGN WITH INK

APPLICATION FOR PERMIT
HEATING OR POWER EQUIPMENT

To the INSPECTOR OF BUILDINGS, PORTLAND, ME.

The undersigned hereby applies for a permit to install the following heating, cooking or power equipment in accordance with the Laws of Maine, the Building Code of the City of Portland, and the following specifications:

Location / CBL MAINE HEALTH 39C1 Use of Building OFFICE Date 10-18-10

Name and address of owner of appliance 110 FREE STREET PORTLAND, MAINE

Installer's name and address JOHNSON & JORDAN INC. 18 MUSSEY RD SCARBOROUGH, ME. 04074 Telephone 207-883-8345

Location of appliance:

- ☐ Basement
- ☒ Floor Gra. 1, 2, 3
- ☐ Attic
- ☒ Roof

Type of Fuel: N/A

☐ Gas ☐ Oil ☐ Solid

Variable Refrigerant Volume A/C

Appliance Name: VENTILATION FANS

U.L. Approved ☒ Yes ☐ No

Will appliance be installed in accordance with the manufacture's installation instructions? ☒ Yes ☐ No

IF NO Explain:

The Type of License of Installer:

- ☐ Master Plumber # 02460
- ☐ Solid Fuel #
- ☐ Oil #
- ☐ Gas #
- ☐ Other

Type of Chimney: N/A

- ☐ Masonry Lined
  Factory built
- ☐ Metal
  Factory Built U.L. Listing #
- ☐ Direct Vent
  Type UL#

RECEIVED
OCT 20 2010
Dept. of Building Inspections
City of Portland Maine

Type of Fuel Tank N/A

- ☐ Oil
- ☐ Gas

Size of Tank

Number of Tanks

Distance from Tank to Center of Flame feet.

Cost of Work: $ 103,000.00

Permit Fee: $ 1050

Approved

Fire:

Ele.:

Bldg.:

Approved with Conditions

☐ See attached letter or requirement

Inspector's Signature Date Approved

Signature of Installer Johnson & Jordan Proj. Mgr.

White - Inspection Yellow - File Pink - Applicant's Gold - Assessor's Copy

CITY OF PORTLAND, MAINE

Department of Building Inspections

Original Receipt

10-20 2010

Received from Johnson & Jordan

Location of Work 110 Free St

Cost of Construction $_____ Building Fee: _____

Permit Fee $_____ Site Fee: _____

Certificate of Occupancy Fee: _____

Total: 41,050

Building (I1) ___ Plumbing (I5) ___ Electrical (I2) ___ Site Plan (U2) ___

Other HVAC

CBL: 39-C-1

Check #: 19280 **Total Collected $** 41,050

No work is to be started until permit issued.
Please keep original receipt for your records.

Taken by: L.P.

WHITE - Applicant's Copy
YELLOW - Office Copy
PINK - Permit Copy

SUBMITTAL

PROJECT:	MAINE HEALTH CARE 110 FREE STREET PORTLAND, MAINE 04101
GENERAL CONTRACTOR:	CONSIGLI 84 MIDDLE STREET PORTLAND, MAINE 04101
ARCHITECT:	HARRIMAN ASSOCIATES 46 HARRIMAN DRIVE AUBURN, MAINE 04210
ENGINEER:	HARRIMAN ASSOCIATES 46 HARRIMAN DRIVE AUBURN, MAINE 04210
SUBCONTRACTOR:	N/A
SUPPLIER:	Briggs Equipment Sales, Inc. P. O. box 1375 16 North Brook Drive Gray, Maine 04039 Contact: Bruce Briggs Phone: 207-657-7123 Fax: 207-657-7124
SPECIFICATION SECTION:	238126
PARAGRAPH:	Part 2 products
DRAWINGS:	M40.0 Evaporator Unit / Condensing Unit Schedule
ITEM:	VARIABLE REFRIGERANT VOLUME AIR CONDITIONING

JOHNSON&JORDAN, INC.
18 Mussey Rd. Scarborough, ME
Approved_____ Approved as Noted_____
Re-Submit_____ Reviewed_____X_____
Subject to Architects Approval _X_____
Date 4/15/10 By [illegible]

MAINE HEALTH CARE
110 FREE STREET
PORTLAND, MAINE

VARIABLE REFRIGERANT VOLUME AIR CONDITIONING

MANUFACTURER: **DAIKIN**

SUPPLIER: **Briggs Equipment Sales, Inc.**
P. O. box 1375
16 NorthBrook Drive
Gray, Maine 04039
Contact: Bruce Briggs
Phone: 207-657-7123
Fax: 207-657-7124

INSTALLER: **Johnson & Jordan Mechanical Contractors**
18 Mussey road
Scarborough, Maine 04074
Contact: Lew Kershner
Phone: 207-883-8345
Fax: 207-883-8619

INCLUDES:

1. Daikin indoor and outdoor units

BRIGGS
EQUIPMENT SALES, INC.

SUBMITTAL DATA

Project:	Maine Health
Mechanical Engineer:	Harriman Associates
Mechanical Contractor:	Johnson and Jordan
Date:	April 16, 2010
Product:	VRV Heat Pump System
Specification Section:	23 81 26
Revision:	00

Tag	Qty	Model / Description	Manufacturer
CU-1	1	RXYQ / VRV Heat Pump	Daikin A/C
CU-2	1	RXYQ / VRV Heat Pump	Daikin A/C
EU-001	1	FXMQ72 / Ducted Evaporator	Daikin A/C
EU-002, 101, 201, 301	4	FXMQ36 / Ducted Evaporators	Daikin A/C

Comments / Notes

Note: CU-1 and CU-2 will be joined together using an outdoor multi connection
pipe kit. The enclosed submittal refers to CU-1, CU-2 as (1) single part number
RXYQ168PYDN and uses the tag CU-1.

BRIGGS
EQUIPMENT SALES, INC.

VRV Express Report

McQuay

An Authorized Representative for Northern New England

DAIKIN

DAIKIN AC
Innovative comfort

Produced on 4/14/2010 with Xpress V5.1.0 - database Central USA 6.2

Project name	Maine Health
Reference	Heat Pump
Client name	Harriman Associates
Revision	Option 2

Selection parameters of the indoor units can be found in the specific Indoor unit type engineering data book
Selection parameters of the outdoor units can be found in the specific Outdoor unit engineering data book
Only the data published in the data book are correct. This program uses close approximations of these data.

1. Material List

Model	Qty	Description
RXYQ168PYDN	1	Heat pump VRV P R410A (460V)
FXMQ36MVJU	4	M - Concealed Ducted (Medium Static)
FXMQ72MVJU	1	M - Concealed Ducted (Medium Static)
KHRP26A33T	1	REFNET branch piping kit
KHRP26M72TU	3	REFNET branch piping kit
BRC2A71	5	Simplified Wired Controller
BHFP22P100U	1	Outdoor Multi Connection Pipe Kit - VRV P Series HP

The Xpress Program is property of Daikin Europe NV. Daikin Europe NV cannot be held liable for any inaccuracy, reliability of the outcome of the Xpress Program.

2. Indoor Unit Details

2.1. Table of Abbreviations

Name	Logical name of the device, possibly preceeded by room name
FCU	Device model name
Tmp C	Indoor conditions in cooling (dry bulb temp. / RH)
TC	Available total cooling capacity
SC	Available sensible cooling capacity
Tmp H	Indoor temperature in heating
HC	Available heating capacity (with freeze-up correction)
Airflow	Supplied airflow at low and high fan speed
Sound	Sound pressure low and high
MCA	Minimum Circuit Amps
MOP	MOP
WxHxD	WidthxHeightxDepth
Wght	Weight of the device

2.2. CU-1 - RXYQ168PYDN

Actual capacity data at conditions and combination ratio (129%) as entered

Name	FCU	Tmp C	TC	SC	Tmp H	HC	Airflow
		°F	BTU/h	BTU/h	°F	BTU/h	cfm
Third Floor:EU-301	FXMQ36MVJU	75.9 / 50%	26242	21523	72.0	26190	609-1019
Second Floor:EU-201	FXMQ36MVJU	75.9 / 50%	26242	21523	72.0	26190	609-1019
First Floor:EU-101	FXMQ36MVJU	75.9 / 50%	26242	21523	72.0	26190	609-1019
Basement:EU-002	FXMQ36MVJU	75.9 / 50%	26242	21523	72.0	26190	609-1019
Basement:EU-001	FXMQ72MVJU	75.9 / 50%	52485	42214	72.0	52381	1768-2048
Total			157454	128306		157143	

Name	Sound	MCA	MOP	WxHxD	Wght
	dBA	A		inch	lbs
Third Floor:EU-301	41-45	2.9	15A	43.7x15.4x27.2	139
Second Floor:EU-201	41-45	2.9	15A	43.7x15.4x27.2	139
First Floor:EU-101	41-45	2.9	15A	43.7x15.4x27.2	139
Basement:EU-002	41-45	2.9	15A	43.7x15.4x27.2	139
Basement:EU-001	45-48	9	15A	54.3x18.5x43.3	302

1.

Outdoor unit placed 45.0ft above the indoor units.
The minimum connection ratio for this height difference is 50%.

The Xpress Program is property of Daikin Europe NV. Daikin Europe NV cannot be held liable for any inaccuracy, reliability of the outcome of the Xpress Program.

3. Outdoor Unit Details

3.1. Table of Abbreviations

Name	Logical name of the device, possibly preceeded by room name
Model	Device model name
Comb	Combination percentage
Tmp C	Outdoor temperature in cooling
CC	Cooling capacity
Tmp H	Outdoor temperature in heating
HC	Heating capacity (with freeze-up correction)
Piping	Longest equivalent length from indoor unit to outdoor unit
Refrig	Standard factory refrigerant charge (16.4ft actual piping length), excluding extra refrigerant charge For calculation of extra refrigerant charge refer to the databook
PS	Power supply (voltage and phases)
MCA	Minimum Circuit Amps
RLA	Compressor(s) Rated Load Amps
MSC	Compressor(s) Max. Starting Current
MOP	MOP
WxHxD	WidthxHeightxDepth
Wght	Weight of the device

3.2. Outdoor Details

Name	Model	Comb	Tmp C	CC	Tmp H	HC	Piping	Refrig
		%	°F	BTU/h	°F	BTU/h	ft	lbs
CU-1	RXYQ168PYDN	129	94.6	171459	32.0	157143	147.6	38.0

Name	Model	PS	MCA	RLA	MSC	MOP	WxHxD	Wght
			A	A	A		inch	lbs
CU-1	RXYQ168PYDN	460V 3ph					74.0x66.1x30.1	1146
	* RXYQ96PYDN		20.3	12.3	95	25 A		
	* RXYQ72PYDN		20.2	7.1	95	25 A		

The Xpress Program is property of Daikin Europe NV. Daikin Europe NV cannot be held liable for any inaccuracy, reliability of the outcome of the Xpress Program

4. Piping Diagrams

Pipes marked with * in the diagrams must be connected using the reducing joint. Piping Limitations differ from VRV-III-S to VRV III (P-Series) so always check with the Engineering Data Books to verify allowable piping lengths, pipe sizing, REFNET rules, and additional refrigerant calculations. In summary, VRV-III-S units allow up to 492ft Actual, 164ft (130ft) Vertical, 130ft from 1st REFNET and 1000ft Total. VRV III (P-Series) units allow up to 540ft Actual, 164ft (295ft) Vertical, 295ft from 1st REFNET and 3280ft Total.

4.1. Piping CU-1

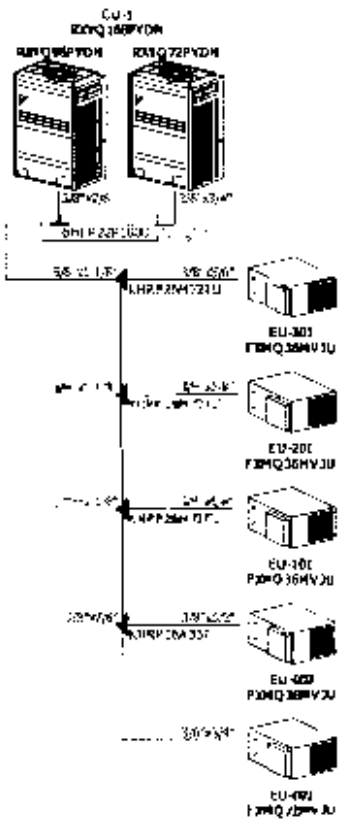

The Xpress Program is property of Daikin Europe NV. Daikin Europe NV cannot be held liable for any inaccuracy, reliability of the outcome of the Xpress Program.

5. Wiring Diagrams

P1P2 = 18-2 AWG 2 core non screened stranded wire (non polarity wiring system)
F1F2 = 18-2 AWG 2 core non screened stranded wire (non polarity wiring system)

5.1. Wiring CU-1

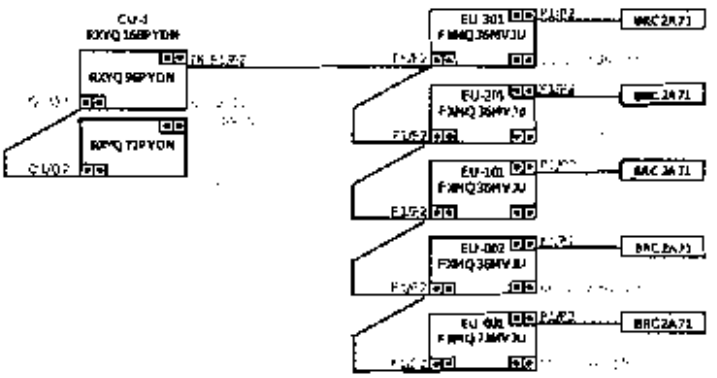

The Xpress Program is property of Daikin Europe NV. Daikin Europe NV cannot be held liable for any inaccuracy, reliability of the outcome of the Xpress Program

6. Device Options

6.1. Outdoor Unit Options

Model	Description	Used by
BHFP22P100U	Outdoor Multi Connection Pipe Kit - VRV P Series HP	CU-1 (RXYQ168PYDN)

The Xpress Program is property of Daikin Europe NV. Daikin Europe NV cannot be held liable for any inaccuracy, reliability of the outcome of the Xpress Program.

BRIGGS
EQUIPMENT SALES, INC.

VRV Heat Pump

McQuay

An Authorized Representative for Northern New England

DAIKIN AC
absolute comfort

Submittal Data Sheet

Project Name:	Maine Health
Location:	Portland, ME
Engineer:	Harriman Associates
Submitted to:	Johnson and Jordan
Submitted by:	Briggs Equipment Sales

TAG: CU-1

Performance

Outdoor Unit Model No:	RXYQ168PYDN
Cooling Capacity (Btu/hr):	168000
Cooling Input Power (kW):	14.7
Cooling EER (Btu/hr / kW):	data book
SEER:	N/A
IEER:	
Heating Capacity (Btu/hr):	189000
Heating Input Power (kW):	16.2
Heating COP (Btu/hr / Btu/hr):	data book
HSPF:	N/A
Heating COP 17F (Btu/hr / Btu/hr):	

Condensing Unit Type:	14-Ton VRV III Heat Pump
Cooling Nominal Conditions	Indoor: 80°FDB, 67°FWB Outdoor: 95°F DB Water Cooled: EWT: 85 °F
Heating Nominal Conditions	Indoor: 70°F DB Outdoor: 47°F DB, 43°F WB Water Cooled: EWT: 70 °F
Nominal Piping Length	25 ft
Nominal Height Difference	0 ft
Nominal Water Flow Rate	

Condensing Unit Details

Power Supply (V/Hz/Ph):	460/60/3ph
Power Supply Connections:	L1, L2, L3 Ground
Min. Circuit Amps MCA (A):	20.3+20.2
Max. Fusible Amps MFA (A):	25 + 25
Max. Starting Current MSC(A):	69
Rated Load Amps RLA (A):	7.1+3.9+8.4
Total Overcurrent Amps (A):	31.5 + 31.5
Dimensions (HxWxD):	66-1/8x75-1/2x30-1/8
Net Weight (lbs):	573+573
Compressor Type:	Inverter
Capacity Control Range (%):	9 - 100
Capacity Index Limit:	84 - 218 (130%)

Airflow Rate (CFM):	6,530+6,530
Gas Pipe Connection (inch):	1-1/8
Liquid Pipe Connection (inch):	5/8
H/L Pressure Connection (inch):	3/4
H/L Equalizing Connection (inch):	3/4
Water Inlet Connection (inch FPT):	
Water Outlet Connection (inch FPT):	
Condensate Drain Outlet (inch FPS):	
Sound Pressure Level (dBA):	61
Sound Power Level (dBA):	
Unit Heat Rejection (kW):	
Max. No. of Indoor Units:	29

System Details

Refrigerant Type:	R-410A
Holding Refrigerant Charge (lbs):	19.8+18.1
Additional Charge (oz/ft):	install data
Pre-charge Piping (Length ft):	-
Max. Pipe Length (Horizontal ft):	540 ft
Max. Pipe Length (Vertical ft):	164 ft (295 ft) / 295 ft
Max Height Seperation (Ind to Ind ft):	49 ft

Cooling Operation Range (°F):	23 - 110
Cooling Range w/Baffle (°F):	
Heating Operation Range (°F):	0 - 77 / -4 - 60
Heating Range w/Baffle (°F):	
Cooling Inlet Water Temp (°F):	
Heating Inlet Water Temp (°F):	
Water Flow Range (GPM):	

Daikin's products are subject to continuous improvements. Daikin reserves the right to modify product design, specifications and information in this data sheet without notice and without incurring any obligation.

DAIKIN AC
absolute comfort

Submittal Data Sheet

Dimensional Drawing - Condensing Unit

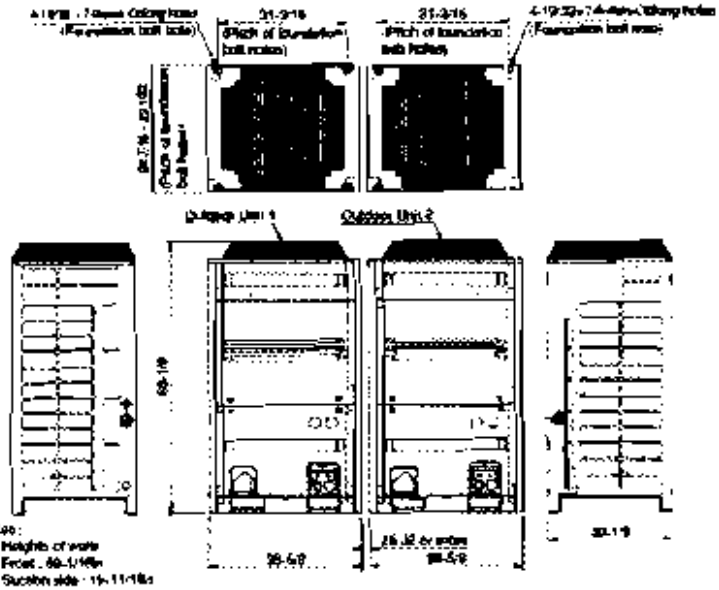

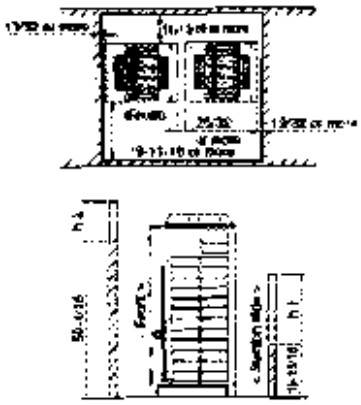

Notes:

1. Heights of walls
   Front : 60-1/16in
   Suction side : 19-11/16in
   Side : Height unlimited
   The installation space shown in this figure is based on the condition of cooling operation at the outdoor air temperature of 95°F.
   The installation space of suction side shown above must be expanded in the following case.
   Design outdoor temperature becomes over 95°F
   Operating over Max. operating load in case of cooling & heavy heating load at below -4°F
2. If the above wall heights are exceeded then h2/2 and h1/2 should be added to the front and suction side service space respectively as shown in the following figure
3. When installing the units the most appropriate pattern should be selected from those shown above in order to obtain the best fit in the space available always bearing in mind the need to leave enough room for a person to pass between units and wall and for the air to circulate freely
   If more units are to be installed than are catered for in the above patterns your layout should take account of the practicality of short circuit.
4. The units should be installed in more sufficient space at the best for the on site refrigerant piping work to be carried out conveniently

Appearance - Condensing Unit

(Daikin products are subject to continuous improvements. Daikin reserves the right to modify product design, specifications and information in this data sheet without notice and without incurring any obligations.)

BRIGGS
EQUIPMENT SALES, INC.

Concealed Ducted Evaporators

McQuay

An Authorized Representative for Northern New England

DAIKIN AC
absolute comfort

Submittal Data Sheet

Project Name:	Maine Health
Location:	Portland, ME
Engineer:	Harriman Associates
Submitted to:	Johnson and Jordan
Submitted by:	Briggs Equipment Sales

TAG: EU-002, EU-101, EU-201, EU-301

Performance

Indoor Unit Model No:	FXMQ36MVJU	Indoor Unit Type:	Duct Mounted Medium Static
Cooling Capacity (Btu/hr):	36000	*Cooling Nominal Conditions*	Indoor: 80°FDB, 67°FWB Outdoor: 95°F DB
Sensible Capacity (Btu/hr):	26300		
Cooling Input Power (kW):	0.467	*Heating Nominal Conditions*	Indoor: 70°F DB Outdoor: 47°F DB, 43°F WB
Heating Capacity (Btu/hr):	40000		
Heating Input Power (kW):	0.467	*Nominal Piping Length*	25 ft
Nominal Ext Static Pressure (inH2O):	0.43	*Nominal Height Separation*	0 ft
Max Ext Static Pressure (inH2O):	0.71		

Indoor Unit Details

Power Supply (V/Hz/Ph:)	208-230/60/1ph	*Airflow Rate (CFM wet coil)*	1020/810
Power Supply Connections:	L1, L2, Ground	*Moisture Removal (pt/h).*	
Min. Circuit Amps MCA (A):	2.9	*Gas Pipe Connection (inch):*	5/8
Max. Fusible Amps MFA (A):	15	*Liquid Pipe Connection (inch):*	3/8
Dimensions (HxWxD):	15-3/8x43-3/4x27-1/8	*Condensate Connection (inch):*	1-1/14
Panel (HxWxD):	N/A	*Sound Pressure Level (dBA):*	45
Net Weight (lbs):	139	*Sound Power Level (dBA):*	
Weight with Panel (lbs):			

Appearance - Indoor Unit

DAIKIN AC
absolute comfort

Submittal Data Sheet

Dimensional Drawing - Indoor Unit

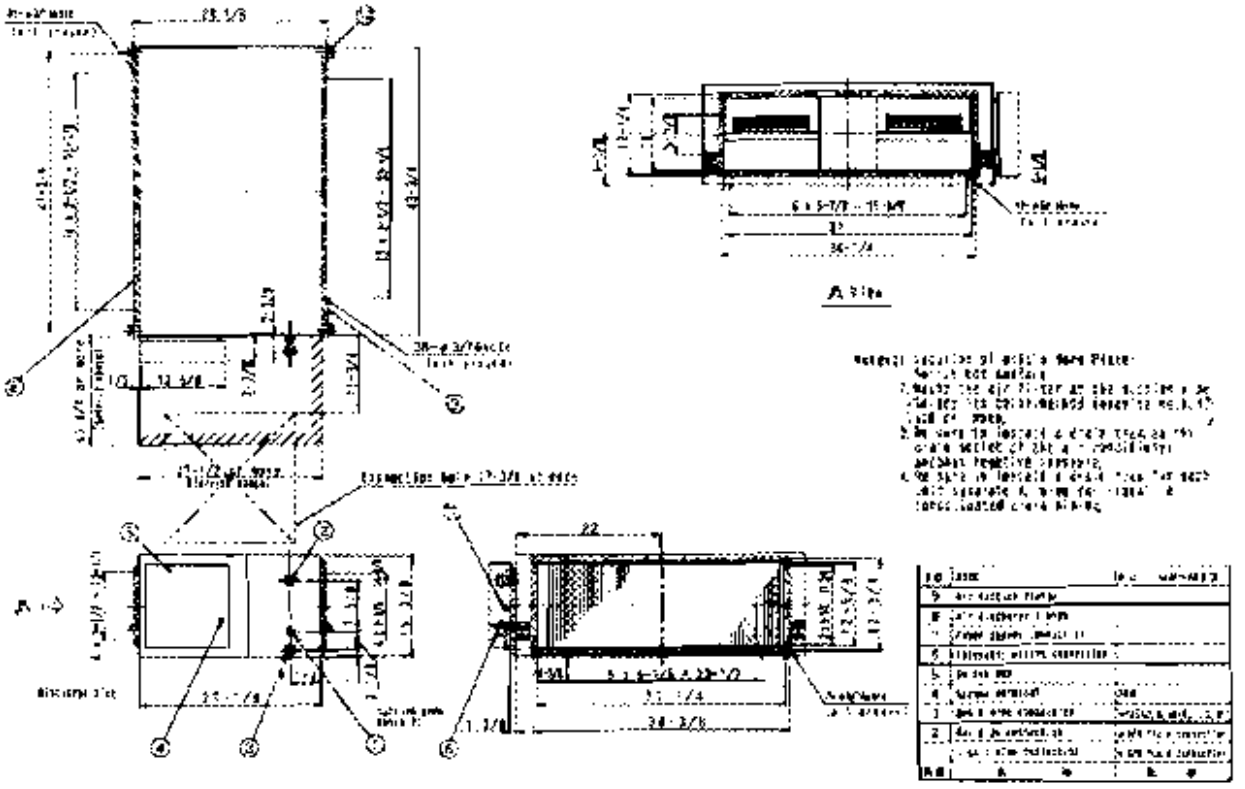

(Daikin's products are subject to continuous improvement. Daikin reserves the right to modify product designs, specifications and information in this data sheet without notice and without incurring any obligations.)

DAIKIN AC
absolute comfort

Submittal Data Sheet

TAG: EU-001

Project Name:	Maine Health
Location:	Portland, ME
Engineer:	Harriman Associates
Submitted to:	Johnson and Jordan
Submitted by:	Briggs Equipment Sales

Performance

Indoor Unit Model No:	FXMQ72MVJU	Indoor Unit Type:	Duct Mounted Medium Static
Cooling Capacity (Btu/hr):	72000	*Cooling Nominal Conditions*	Indoor: 80°FDB, 67°FWB Outdoor: 95°F DB
Sensible Capacity (Btu/hr):	56980		
Cooling Input Power (kW):	1.49	*Heating Nominal Conditions*	Indoor: 70°F DB Outdoor: 47°F DB, 43°F WB
Heating Capacity (Btu/hr):	81000		
Heating Input Power (kW):	1.49	*Nominal Piping Length*	25 ft
Nominal Ext Static Pressure (inH2O):	0.38	*Nominal Height Separation*	0 ft
Max Ext Static Pressure (inH2O):	0.95		

Indoor Unit Details

Power Supply (V/Hz/Ph:)	208-230/60/1ph	*Airflow Rate (CFM wet coil)*	2047//1784
Power Supply Connections:	L1, L2, Ground	*Moisture Removal (pt/h):*	
Min. Circuit Amps MCA (A):	9.5	*Gas Pipe Connection (inch):*	3/4
Max. Fusible Amps MFA (A):	15	*Liquid Pipe Connection (inch):*	3/8
Dimensions (HxWxD):	18-1/8x54-3/8x43-5/16	*Condensate Connection (inch):*	1
Panel (HxWxD):	N/A	*Sound Pressure Level (dBA):*	48
Net Weight (lbs):	302	*Sound Power Level (dBA):*	
Weight with Panel (lbs):			

Appearance - Indoor Unit

[redacted]

Dimensional Drawing - Indoor Unit

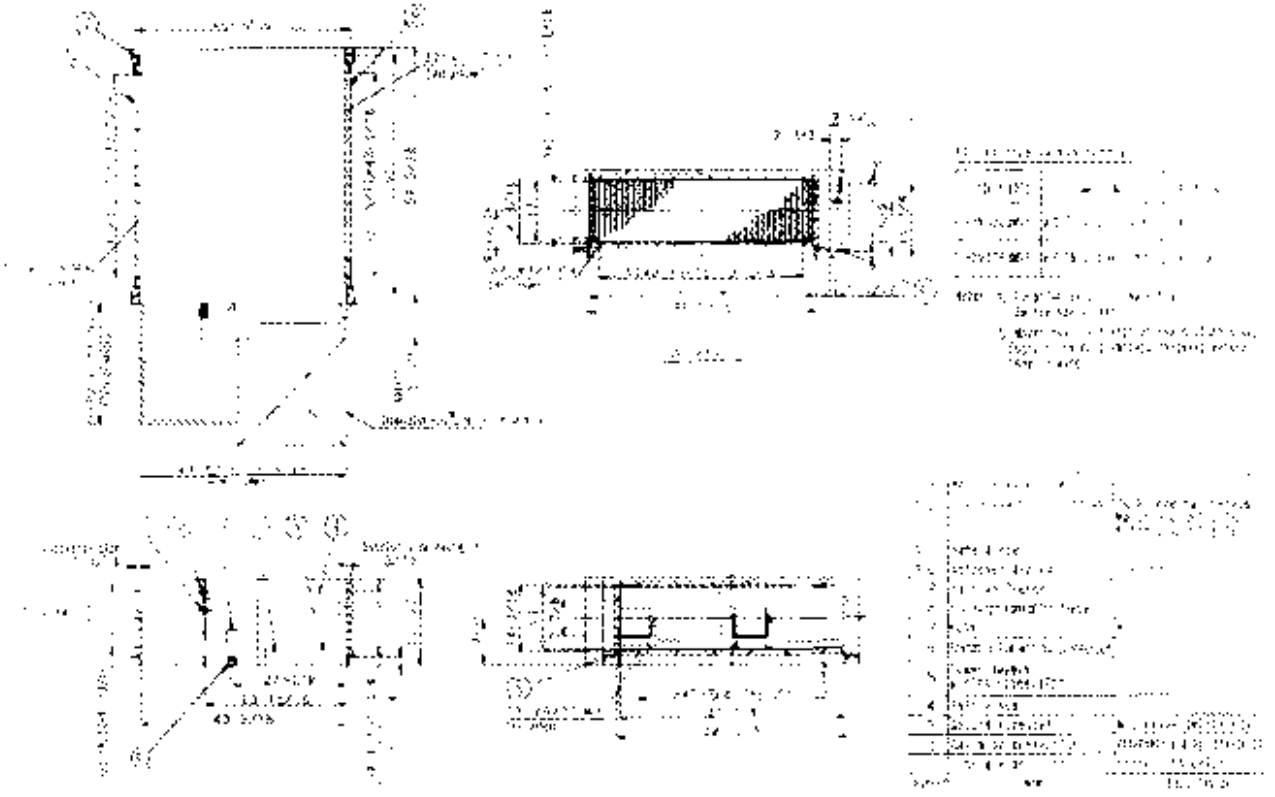

(Daikin products are subject to continuous improvements. Daikin reserves the right to modify product design, specifications and information in this data sheet without notice and without incurring any obligations.)

BRIGGS
EQUIPMENT SALES, INC.

Controls

McQuay

An Authorized Representative for Northern New England

DAIKIN AC
absolute comfort

Submittal Data: BRC2A71
Individual Zone Controller
Simplified Wired Remote Controller

Job Name:	Maine Health	Location:	Portland, ME
Purchaser:	Johnson and Jordan		
Engineer:	Harriman Associates		
Submitted To:	Johnson and Jordan	For:	☐ Reference ☒ Approval ☐ Construction
Submitted By:	Briggs Equipment Sales	Date:	April 16, 2010

Remote controller wiring for transmission for a simplified remote controller (BRC2A71) is the same as that of a standard remote controller (BRC1D71). Because the functions of the simplified remote controller are limited, it is recommended using in combination with a central remote controller.

FEATURES / BENEFITS
• 1 group/maximum of 16 units controllable.
• Simple, compact and easy-to-operate unit.
• Suitable for use in hotel bedrooms.

VRV SYSTEM
THE INTELLIGENT AIR CONDITIONING SYSTEM

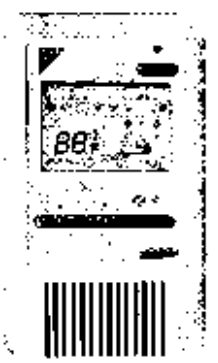

OPERATION	Start/Stop
	Operation Mode
	Temperature Setting
	60°F – 90°F Set Point Range
	Fan Speed
MONITORING	Status
	Malfunction Flashing
	Malfunction Content
	Operation Mode
	Temperature Setting
	Permit/Prohibit Selection
	Fan Speed
CONTROL MANAGEMENT	Field Setting Mode
	Group Setting
	Auto Re-Start

SPECIFICATIONS OF CORD	
TYPE	2-core sheathed vinyl cord or cable
SIZE	AWG16-2

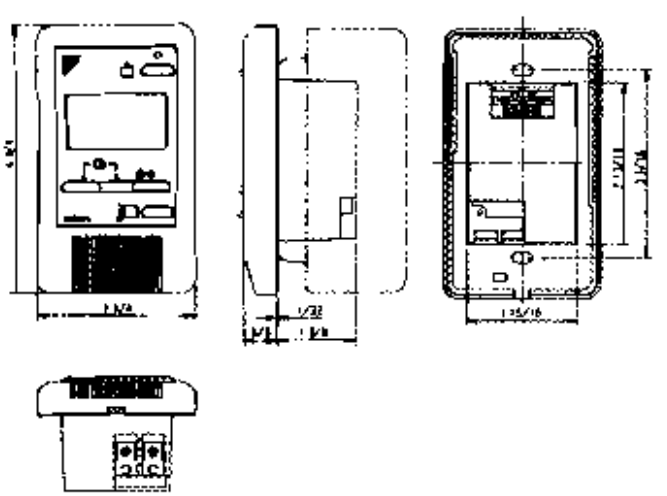

If used with FXFQ, FXAQ, FXNQ & FXLQ no louver function exists.

(Daikin's products are subject to continuous improvements. Daikin reserves the right to modify product design, specifications and information in this data sheet without notice and without incurring any obligations.)

DAIKIN AC
absolute comfort

Submittal Data: DMS502B71
BACnet® Interface

Job Name:	Maine Health	Location:	Portland, ME
Purchaser:	Johnson and Jordan		
Engineer:	Harriman Associates		
Submitted To:	Johnson and Jordan	For:	☐ Reference ☒ Approval ☐ Construction
Submitted By:	Briggs Equipment Sales	Date:	April 16, 2010

FEATURES / BENEFITS

- Integrate Daikin VRV, SkyAir and Duct-Free Split Systems with third party building automation systems supporting the BACnet protocol.
- BACnet Application Specific Controller (B-ASC) device profile compatible with BACnet (ANSI / ASHRAE-135)
- BACnet IP Data Link Layer (Annex J)
- Supports COV – Change of Value, Property Array Index and Segmented Requests
- IPV6 and Foreign Device Registration capability
- BTL Certification (Operating System Version 6.2 and Later)

Power:

Power supply (externally supplied)	24VAC, 50/60Hz
Power consumption	20 Watts maximum (40 VA Transformer Recommended)

Operating conditions:

Surrounding temperature	14° F to 122° F
Storage temperature	5° F to 140° F
Humidity (% Relative)	0% to 98% (non-condensing)
Dimensions (H x W x D)	10-13/16" x 10-11/32" x 2-11/16"

Maximum number of outdoor units	20 (*40 with DAM411B51*)
Maximum number of indoor units	128 (*256 with DAM411B51*)
Temperature Unit	Degrees Celsius (*Fixed*)

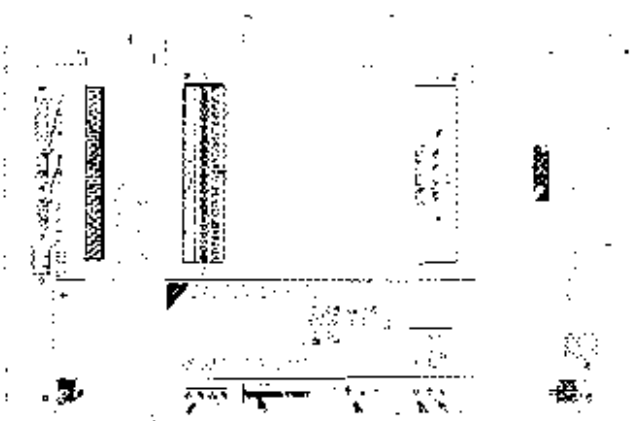

Connectivity:

DIII-Net x 2	AC equip. communication line
10BASE-T or 100BASE-TX	Interface to BACnet network
Di (Digital Input) x 4	Forced Off Function
Do (Digital Output) x 2	A/C malfunction indication

Options:

DAM411B51	Adds (2) DIII-Net lines
DAM412B51	Adds (12) Pulse inputs for PPD
Certifications:	FCC Part 15 Subpart B Class A

Configuration and engineering for each project are necessary.

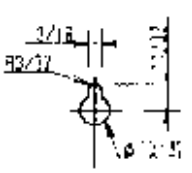

SPECIFICATIONS OF COMMUNICATIONS CABLING (DIII-NET)	
TYPE	2-conductor, stranded, non-shielded copper cable / PVC or vinyl jacket
SIZE	AWG18-2
TOTAL LENGTH	Maximum wiring distance between units: 3,280 ft Maximum wiring length: 6,560 ft

(Daikin products are subject to continuous improvements. Daikin reserves the right to modify product design, specifications and information in this data sheet without notice and without incurring any obligations)

DAIKIN AC
absolute comfort

Submittal Data: DMS502B71
BACnet® Interface

Daikin air conditioner monitoring and control points accessible through the DMS502B71

Check the appropriate box indicating the required integrated points for this project.

		Function	Description
Monitoring points		Start / stop status	Monitors the start / stop status of the air conditioner.
		Alarm	Monitors whether or not the air conditioner is operating normally, and issues an alarm if the air conditioner has a malfunction.
		Malfunction code	Displays a malfunction code specified by the manufacturer if an air conditioner in the system has a malfunction.
		Air-conditioning mode	Monitors if the air conditioner is cooling, heating, or ventilating.
		Room temperature (Note 1)	Monitors and displays the room temperature.
		Filter sign	Checks if the filter is clogged and monitors whether or not it can still be used.
		Thermostat status	Monitors whether or not the air conditioner is properly controlling the temperature.
		Compressor status	Monitors if the compressor of the outdoor unit connected to the indoor unit is properly operating.
		Indoor fan status	Monitors if the indoor unit's fan is properly operating.
		Heater operation status	Monitors if the indoor unit's heater is properly operating.
		Accumulated power	Outputs indoor unit's accumulated power consumption
Operation, configuration, and monitoring points		Start / stop operation (Note 2)	Starts / stops the air conditioner and monitors the result
		Air-conditioning mode setting (Note 2)	Sets the cooling / heating / ventilating / auto air-conditioning mode and monitors the result.
		Room temperature setting (Note 2)	Sets the room temperature of the air conditioner and monitors the result
		Filter sign and reset	Checks if the filter is clogged and resets the status as required.
		Remote controller enable / disable (Note 2)	Enables or disables the remote controller so that it can or cannot be used to control the air conditioner's start / stop / air-conditioning mode / room temperature.
		Lower central device operation enable / disable	Enables or disables operation of a central device connected to the DIII network.
		Air flow rate setting (Note 2)	Sets the air flow rate and monitors the result
		Air direction setting (Note 2)	Sets the air direction and monitors the result.
		Forced system stop	In response to the forced stop command, checks whether clearance or setting is required and performs the required action.
		Forced thermostat disable	In response to the forced thermostat disable command, checks whether clearance or setting is required and performs the required action.
		Energy saving	In response to the energy saving command, checks whether clearance or setting is required and performs the required action.

Application Notes

1. Room temperature data (BACnet object name RoomTemp_XXX) is reported from the Daikin indoor units embedded return air thermistor. This applies to all VRV indoor units styles and capacities. During periods when the indoor unit is turned off or during certain operating modes that cycle the fan off including defrost operation, hot-start and system pressure equalization, the reported temperature may not accurately reflect the actual space temperature. For applications where this temperature value will be primary to system control including mode and temperature setpoint management, it is recommended that the Daikin remote temperature sensor (Part No. KRCS01-1A) is specified for each indoor unit and installed within the occupied space.

2. The Daikin indoor unit maintains the settings for temperature, start / stop status, operating mode, air direction and fan speed in non-volatile memory each time they are changed. These settings will not be lost upon a power loss event.

3. BACnet® is a registered trademark of ASHRAE.

Daikin's products are subject to continuous improvements. Daikin reserves the right to modify product design, specifications and information in this data sheet without notice and without incurring any obligations.

BRIGGS
EQUIPMENT SALES, INC.

Piping Kits

McQuay

An Authorized Representative for Northern New England

REFNET Piping System

REFNET Joint (Branch Kit)

RXYQ72~240P

KHRP26A33T

Gas Side

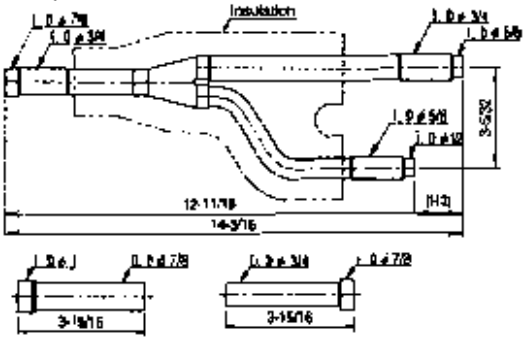

Liquid Side

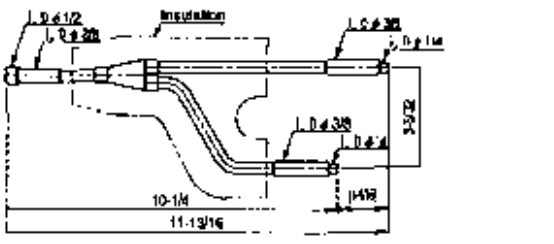

KHRP26M72TU

Gas Side

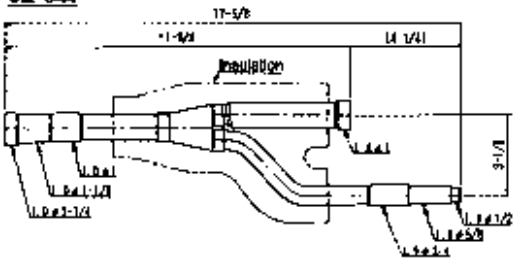

Liquid Side

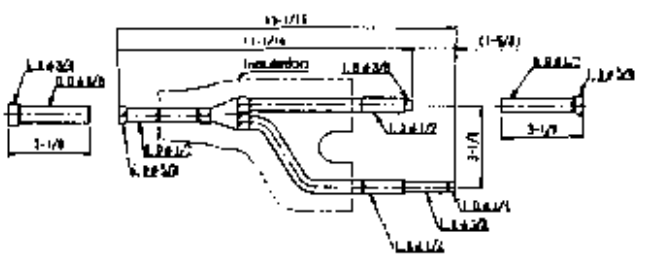

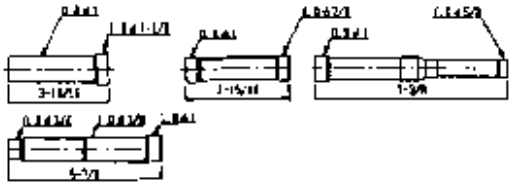

Outdoor Unit Multi Connection Piping Kit

RXYQ72~240P

BHFP22P100U

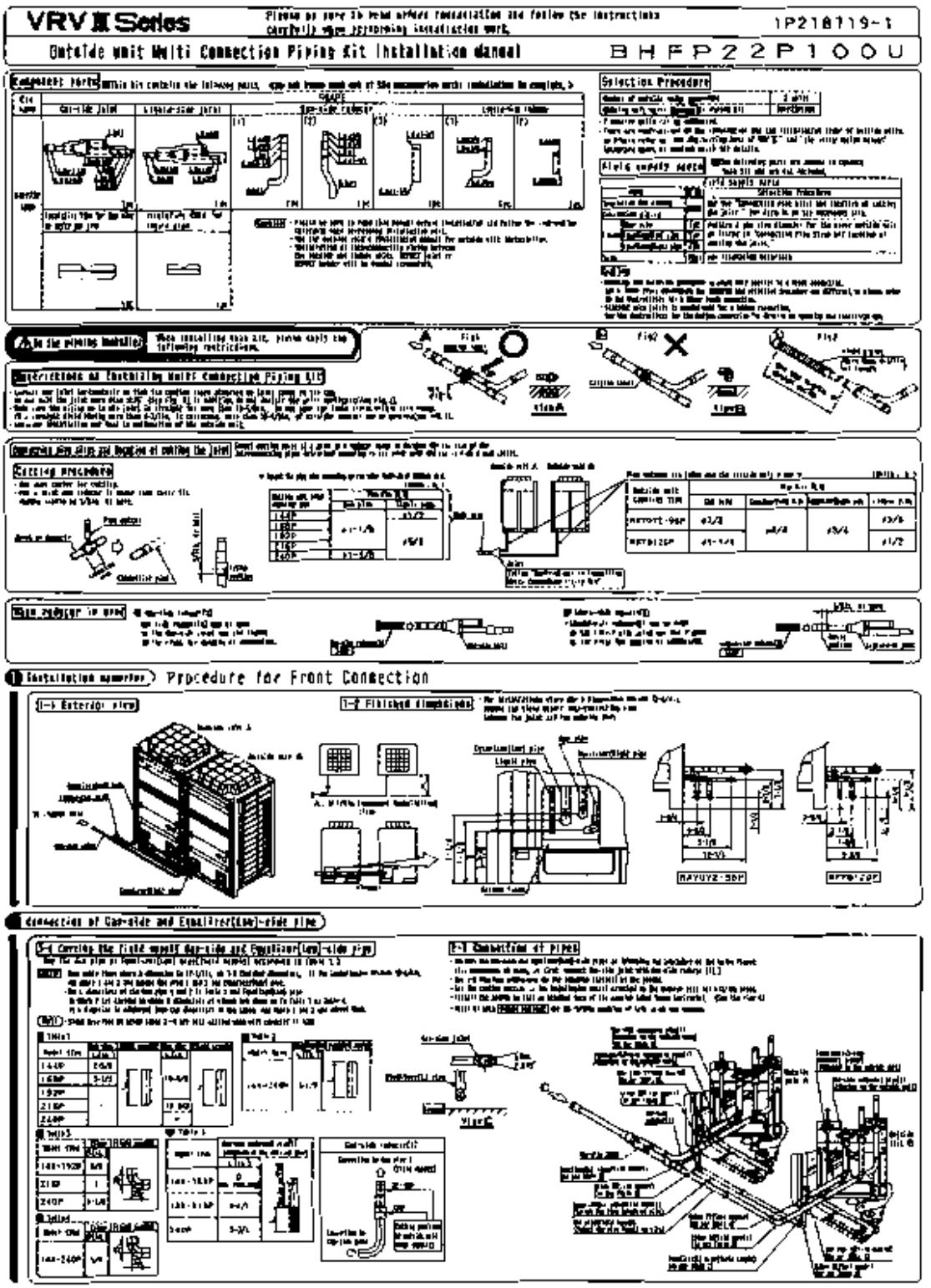

Connection of liquid-side and equalizer(High) pipe

5-1 Cutting the field supply liquid-side and equalizer(High) pipe

5-2 Connection of pipe

The work after the kit is connected

Connection of piping between the outside unit and the indoor unit

Gas Right Lower

Installation of Plate

Installation examples Procedure for Lower Front Connection

1-1 Exterior view

1-2 Finished dimensions

Connection of Gas-side and Equalizer(Low)-side pipe

6-1 Cutting the field supply Gas-side and Equalizer(Low)-side pipe

6-2 Connection of pipe

continue to next page

Connection of Liquid-side and Equalizer(High) pipe

3-1 Cutting the field supply Liquid-side and equalizer(High) pipe

3-2 Connection of pipes

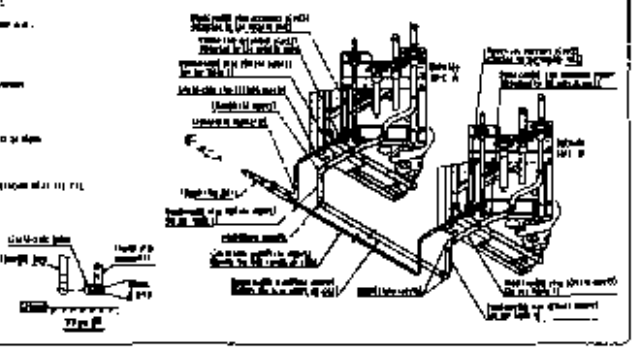

The work after the Oil is connected

Connection of piping (Under the outdoor unit and the indoor unit)

Air tight test

Insulation of joints

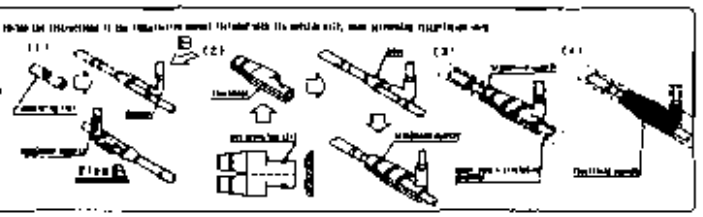

Installation example Procedure for Bottom Connection

Caution This installation is only possible if there is enough space to perform brazing and cutting underneath the outdoor unit. If a centralized connection model has any size, the dimensions marked with "*" in the figure below will vary, so use the limit gauge and determine the length of the field pipe.

4-1 Outdoor side

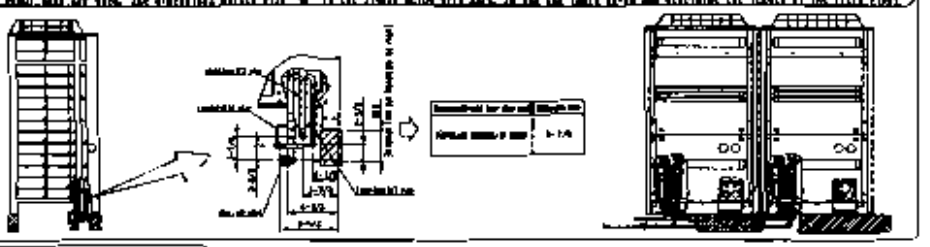

Connection of Gas-side and Equalizer(Low)-side pipe

5-1 Cutting the field supply Gas-side pipe and Equalizer(Low)-side pipe and the Gas-side accessory pipe(*) installed in the outside unit

5-2 Connection of pipes

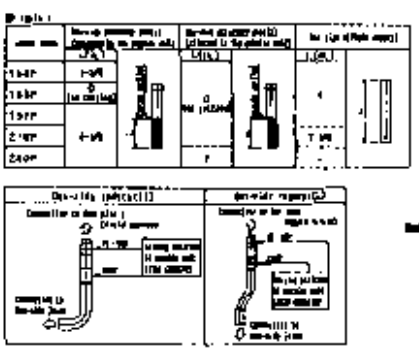

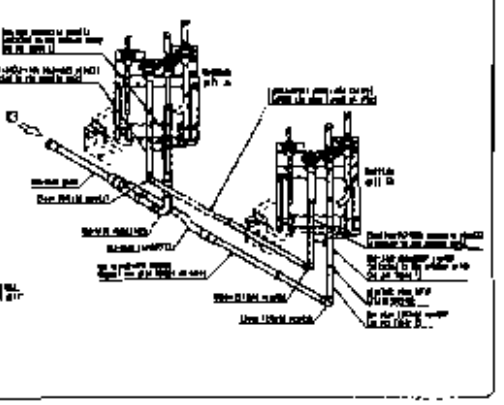

Connection of Liquid-side and equalizer (High) pipe

1-1 Connection of piping

[illegible]

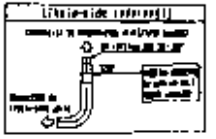

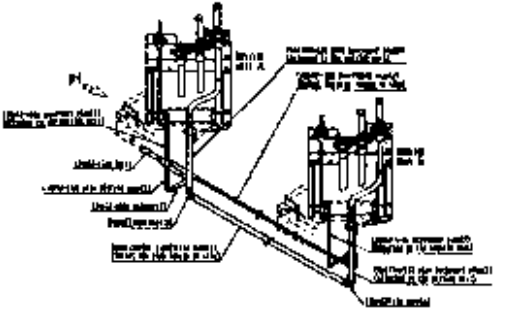

The work after the pipe is connected

Connection of Pipe between the outside unit and the indoor unit

Air tight test

Flare fitting of joints

[illegible]

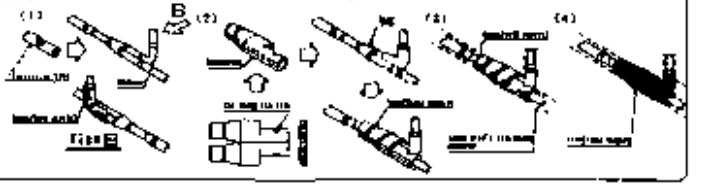

SUBMITTAL

PROJECT:	MAINE HEALTH CARE 110 FREE STREET PORTLAND, MAINE 04101
GENERAL CONTRACTOR:	CONSIGLI 84 MIDDLE STREET PORTLAND, MAINE 04101
ARCHITECT:	HARRIMAN ASSOCIATES 46 HARRIMAN DRIVE AUBURN, MAINE 04210
ENGINEER:	HARRIMAN ASSOCIATES 46 HARRIMAN DRIVE AUBURN, MAINE 04210
SUBCONTRACTOR:	Aero Heating & Ventilating 378 Presumpscot Street Portland, Maine 04103 Contact: Pete Collard Phone: 207-761-2092 Fax: 207-761-4471
SUPPLIER:	H. V. A. C. Products 88 Second Street South Portland, Maine 04106 Contact: Ed Rowe Phone: 207-874-6100 Fax: 207-874-1900
SPECIFICATION SECTION:	233400
PARAGRAPH:	Part 2 Products
DRAWINGS:	M40.0 Fan Schedule
ITEM:	HVAC FANS

JOHNSON&JORDAN, INC.
18 Mussey Rd. Scarborough, ME
Approved_____ Approved as Noted_____
Re-Submit_____ Reviewed X
Subject to Architects Approval X
Date 4/29/10 By [illegible]

MAINE HEALTH CARE
110 FREE STREET
PORTLAND, MAINE

HVAC FANS

MANUFACTURER: Cook

SUPPLIER: H. V. A. C. Products
88 Second Street
South Portland, Maine 04106
Contact: Ed Rowe
Phone: 207-874-6100
Fax: 207-874-1900

INSTALLER: Aero Heating & Ventilating
378 Presumpscot Street
Portland, Maine 04103
Contact: Pete Collard
Phone: 207-761-2092
Fax: 207-761-4471

INCLUDES:

Exhaust Fans: EF01, EF02, EF03, EF04, EF05, EF06, EF07, EF08 & EF09

Supply Fan: SF01

Smoke Exhaust Fans: SEF1, SEF2 & SEF3

Smoke Supply Fan: SSF1

Aero Heating & Ventilating, Inc.

Section 233400

HVAC Fans

HVAC PRODUCTS, INC.
Air Moving Equipment for Commercial and Industrial Applications

PROJECT NAME:	*110 FREE ST. BUILDING RENOVATIONS*
LOCATION:	*PORTLAND, ME*
CUSTOMER:	*AERO HEATING & VENTILATING – PORTLAND, ME*
ENGINEER:	*HARRIMAN ASSOCIATES – AUBURN, ME*
ARCHITECT:	*HARRIMAN ASSOCIATES – AUBURN, ME*
DATE:	*4-28-10*
CUSTOMER PO#:	*VERBAL*
OUR ORDER #:	*HJ004052*
REVISION DATE:	

Submitted For Review

ENCLOSED PLEASE FIND SUBMITTAL DATA CONSISTING OF THE FOLLOWING:

SPEC. SECTION: 233400: HVAC FANS

COOK FAN SCHEDULE
COOK FAN PERFORMANCE/DIMENSIONAL DATA – EF01
COOK FAN PERFORMANCE/DIMENSIONAL DATA – EF02
COOK FAN PERFORMANCE/DIMENSIONAL DATA – EF03
COOK FAN PERFORMANCE/DIMENSIONAL DATA – EF04
COOK FAN PERFORMANCE/DIMENSIONAL DATA – EF05
COOK FAN PERFORMANCE/DIMENSIONAL DATA – EF06
COOK FAN PERFORMANCE/DIMENSIONAL DATA – EF07
COOK FAN PERFORMANCE/DIMENSIONAL DATA – EF08
COOK FAN PERFORMANCE/DIMENSIONAL DATA – EF09
COOK FAN PERFORMANCE/DIMENSIONAL DATA – SF01
COOK FAN PERFORMANCE/DIMENSIONAL DATA – SEF1 & SSF1
COOK FAN PERFORMANCE/DIMENSIONAL DATA – SEF2
COOK FAN PERFORMANCE/DIMENSIONAL DATA – SEF3
COOK ROOF CURB DETAIL
COOK HINGED BASE DETAIL
COOK GREASE TERMINATOR DETAIL
COOK SPEED CONTROL DETAIL
COOK MOTOR COVER DETAIL – INLINE FAN
COOK CEILING VIBRATION ISOLATOR DETAIL
COOK ISOLATION RAIL DETAIL
COOK FLOOR VIBRATION ISOLATOR DETAIL
COOK WARRANTY

HVAC Products Inc.
88 Second St., South Portland, ME 04106
Phone: (207)874-6100 Fax: (207)874-1900
Web address: www.hvacproductsinc.com

COOK

FAN SCHEDULE

Job: 110 FREE ST.
4/28/2010

MARK	QTY	MODEL	VOL (CFM)	SP (inwc)	PWR (HP)	MHP	RPM	SONES	DRIVE	TSPD (fpm)	OVEL (fpm)	SE	WEIGHT (lbs)	MOTOR ENCL	MOTOR RPM	ELECTRICAL
EF01	1	150RH15D	400	.75	.12	.334	1090	5.7	DIRECT	4280	189	43%	127	ODP -SE	1550/0000	115/1/60
EF02	1	90C15DH	300	.4	77.3w	.125	1305	6.	DIRECT	3117	388	61%	59	ODP -SE	1550/0000	115/1/60
EF03	1	100C15DH	575	.4	146.w	.128	1463	5.6	DIRECT	3001	671	52%	68	ODP -SE	1550/0000	115/1/60
EF04	1	120C15D	950	.5	.13	.25	1216	7.7	DIRECT	3626	1001	55%	98	ODP -SE	1550/0000	115/1/60
EF05	1	100 ACEB	574	.5	.14	.197	1667	8.9	BELT	4079	670	47%	74	ODP -SE	1725/0000	115/1/60
Drive Loss(Medium) = 18%																
EF06	1	100C15DH	250	.5	109.w	.128	1396	5.8	DIRECT	3700	409	76%	58	ODP -SE	1550/0000	115/1/60
EF07	1	166 ACEB	3000	.6	.68	.75	849	9.9	BELT	4334	1208	84%	170	ODP -SE	1725/0000	460/3/60
Drive Loss(Medium) = 12%																
EF08	1	90C15DL	100	.5	59.8w	.125	1319	3.8	DIRECT	3180	128	33%	59	ODP -SE	1550/0000	115/1/60
EF09	1	DB-15	5000	.25	1.5	2	668	20.	BELT	2703	2435	14%	288	DDP -PE	1725/0000	460/3/60
Drive Loss(Medium) = 6%																
SF01	1	135SQN-HP	1000	1.	.34	.5	1403	12.9	BELT	5270	444	63%	170	ODP -SE	1725/0000	115/1/60
Drive Loss(Medium) = 16%																
SEF1, SSF1	2	600CA-SWSI	60000	2.	33.8	40	537		BELT	6435	2873	58%	4924	ODP -PE	1725/0000	460/3/60
Drive Loss(Medium) = 4%																
SEF2	1	445CA-SWSI	30000	1.	10.8	15	608		BELT	7083	2609	46%	2843	ODP -PE	1725/0000	460/3/60
Drive Loss(Medium) = 6%																
SEF3	1	445CA-SWSI	30000	1.	10.8	15	608		BELT	7083	2609	46%	2844	ODP -PE	1725/0000	460/3/60
Drive Loss(Medium) = 6%																

COOK

MARK: EF01
PROJECT: 110 FREE ST.
DATE: 4/28/2010

ACRUD-HP

Upblast Centrifugal
Exhaust Ventilator
Roof Mounted/Direct Drive

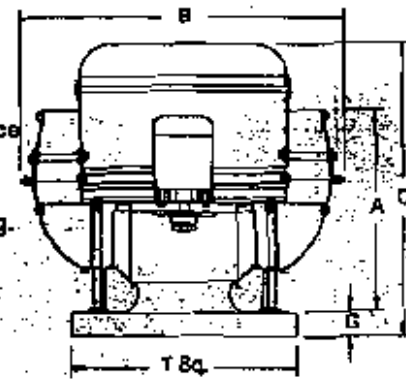

STANDARD CONSTRUCTION FEATURES:

All aluminum housing - Backward inclined all aluminum wheel - Two piece top cap with stainless steel quick release latches - (size 120 - 195) - Welded curb cap corners - Birdscreen - Permanently lubricated ball bearing motors - Corrosion resistant fasteners - Transit tested packaging.

Performance

Qty	Catalog Number	Flow (CFM)	SP (inwc)	Fan RPM	Power (HP)
1	150RH15D	450	.750	1090	.123

Altitude (ft): 62 Temperature (F): 70

Motor Information

HP	RPM	Volts/Ph/Hz	Enclosure
1/3	1550	115/1/60	ODP -SE

Sound Data Inlet Sound Power by Octave Band

1	2	3	4	5	6	7	8	LwA	dBA	Sones
71	63	59	58	56	55	51	45	62	50	5.7

Dimensions (inches)

A	20-15/16
B	34-11/16
C	27-1/2
G	2
T Sq.	24
Roof Open. Sq.*	19-1/2

NOTE: Accessories may affect dimensions shown.

Shipping Weight(lbs)**	127

* Roof opening size for curb supplied by Cook only.
** Includes fan, motor & accessories.

Accessories:

STD DISCONNECT PREWIRED
ROOF CURB RCG 22-18H
HINGED BASE KIT
GREASE TERMINATOR
FAN SPEED CONTROLLER 5 AMP 120 VOLT

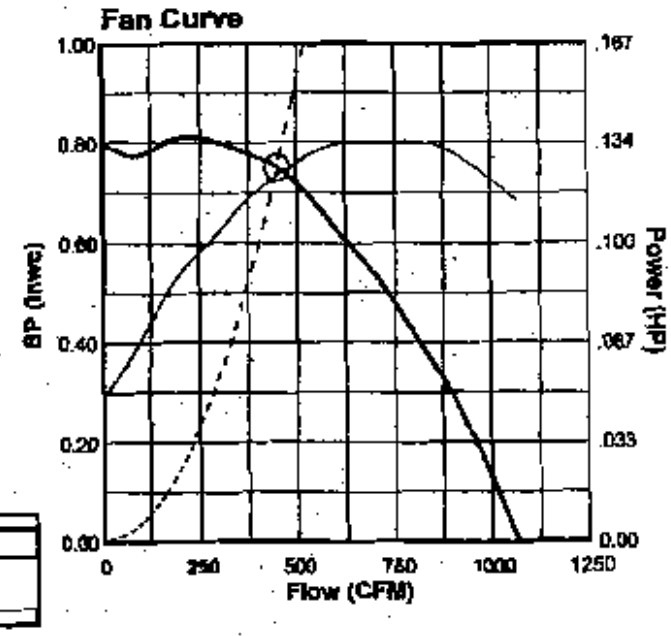

Fan Curve Legend
CFM vs SP
CFM vs HP
Point of Operation
System Curve

Accessories:

STD DISCONNECT PREWIRED
ROOF CURB RCG 16-13.5H
FAN SPEED CONTROLLER 5 AMP 120 VOLT

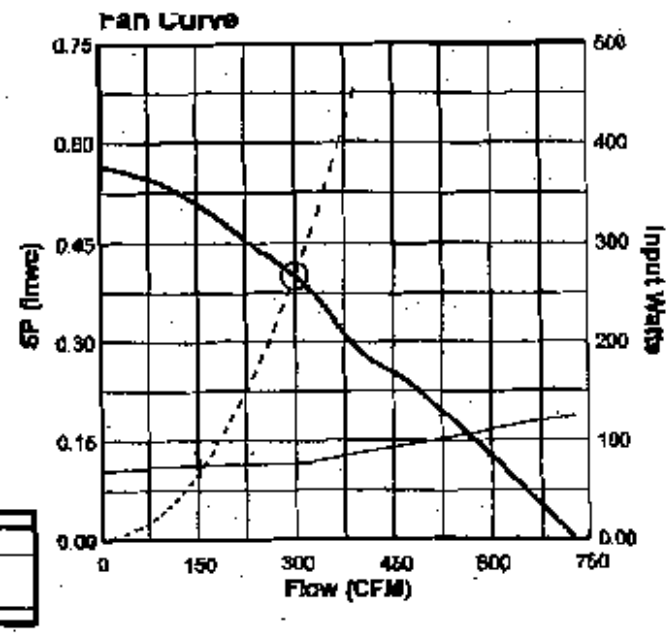

Fan Curve Legend
CFM vs SP
CFM vs Watts
Point of Operation
System Curve

COOK

MARK: EF03	
PROJECT: 110 FREE ST.	
DATE: 4/28/2010	

ACE-D

Downblast Centrifugal
Exhaust Ventilator
Roof Mounted/Direct Drive

STANDARD CONSTRUCTION FEATURES:

All aluminum housing - Backward-inclined all aluminum wheel - Two piece top cap with stainless steel quick release latches (sizes 120 - 180) - Welded curb cap corners - Birdscreen - Permanently lubricated ball bearing motors - Corrosion resistant fasteners - Transit tested packaging.

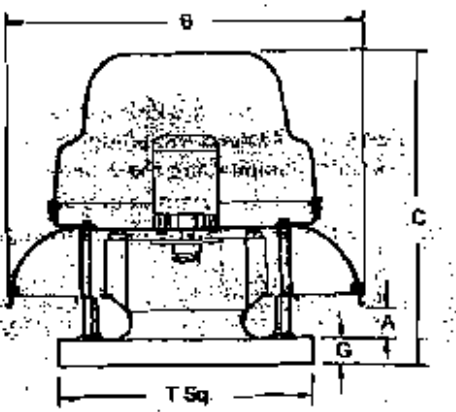

Performance

Qty	Catalog Number	Flow (CFM)	SP (inwc)	Fan RPM	Input Watts
1	100C15DH	575	.400	1468	146

Altitude (ft): 62 Temperature (F): 70

Motor Information

HP	RPM	Volts/Ph/Hz	Enclosure
1/8	1550	115/1/60	ODP -SE

Sound Data Inlet Sound Power by Octave Band

1	2	3	4	5	6	7	8	LwA	dBA	Sones
70	72	76	69	59	57	52	49	71	60	9.8

Accessories:

STD DISCONNECT PREWIRED
ROOF CURB ROG 16-13.5H
FAN SPEED CONTROLLER 5 AMP 120 VOLT

Dimensions (inches)

A	2-1/2
B	16-3/4
C	16-13/16
G	2
T Sq.	18
Roof Open. Sq.*	13-1/2

NOTE: Accessories only affect dimensions shown.

Shipping Weight(lbs)***	58

* Roof opening size for curbs supplied by Cook only.
***Includes fan, motor & accessories.

Fan Curve

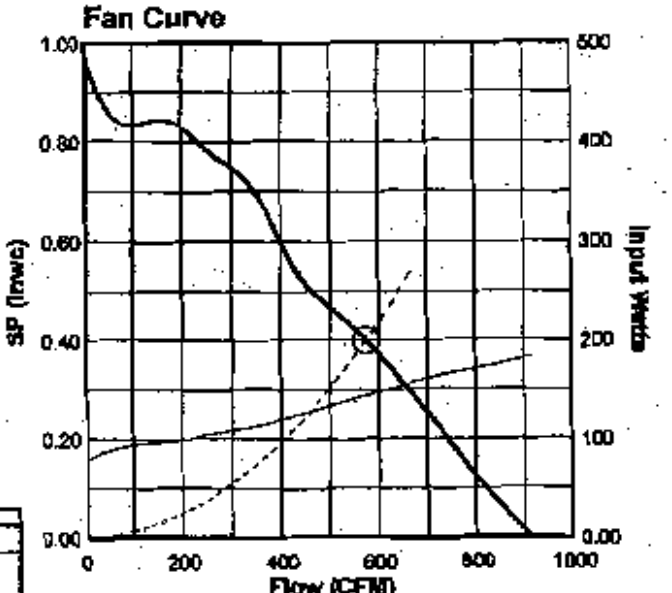

Fan Curve Legend	
CFM vs SP	—
CFM vs Watts	—
Point of Operation	○
System Curve	—

eLT.79.11051

COOK

MARK: EF04
PROJECT: 110 FREE ST.
DATE: 4/28/2010

ACE-D

Downblast Centrifugal
Exhaust Ventilator
Roof Mounted/Direct Drive

STANDARD CONSTRUCTION FEATURES:

All aluminum housing - Backward inclined all aluminum wheels - Two piece top cap with stainless steel quick release latches (sizes 120-160) - Welded curb cap corners - Birdscreen - Permanently lubricated ball bearing motors - Corrosion resistant fasteners - Transit tested packaging.

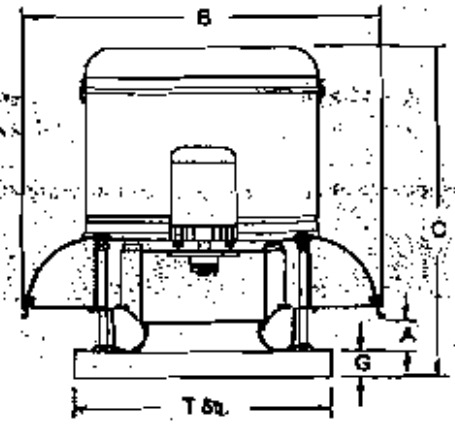

Performance

Qty	Catalog Number	Flow (CFM)	SP (inwc)	Fan RPM	Power (HP)
1	120C15D	950	.500	1218	.129

Altitude (ft): 62 Temperature (F): 70

Motor Information

HP	RPM	Volts/Ph/Hz	Enclosure
1/4	1550	115/1/60	OOP -SE

Sound Data Inlet Sound Power by Octave Band

1	2	3	4	5	6	7	8	LwA	dBA	Sones
66	69	72	63	69	67	61	47	67	56	7.7

Accessories:

STD DISCONNECT PREWIRED
ROOF CURB RCG 18-13.5H
FAN SPEED CONTROLLER 5 AMP 120 VOLT

Dimensions (inches)

A	1-7/16
B	26-7/16
C	26-9/16
G	2
T Sq.	20
Roof Open. Sq.*	15-1/2

NOTE: Accessories may affect dimensions shown.

Shipping Weight(lbs)**	98

*Roof opening size for curbs supplied by Cook only.
**Includes box, motor & accessories.

Fan Curve

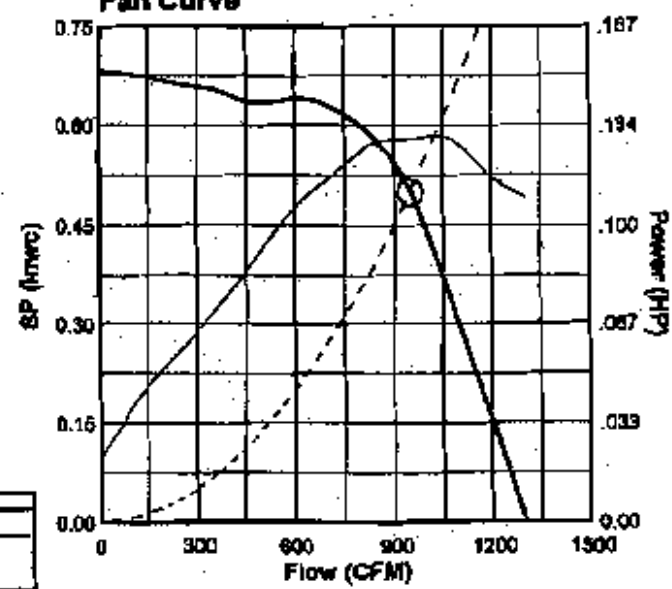

Fan Curve Legend

CFM vs SP	
CFM vs HP	
Point of Operation	○
System Curve	

v4.7.3.1031

COOK

MARK: EF05
PROJECT: 110 FREE ST.
DATE: 4/20/2010

ACE-B

Downblast Centrifugal
Exhaust Ventilator
Roof Mounted/Belt Drive

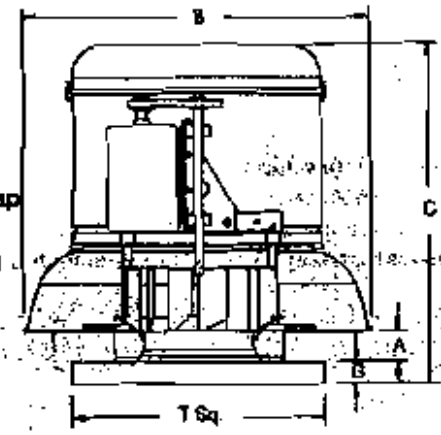

STANDARD CONSTRUCTION FEATURES:

All aluminum housing - Backward inclined aluminum wheel - Two piece top cap with stainless steel quick release latches - Welded curb cap corners - Birdscreen - Vibration isolators - Lifting lugs - Permanently lubricated ball bearing motors - Oil and heat resistant, static conducting belts - Adjustable pitch drives through 5 hp motor - Corrosion resistant fasteners - Regreasable bearings in a cast iron pillow block housing, rated at 200,000 hours average life - All fans factory adjusted to specified fan RPM - Transit tested packaging - Standard motors ship factory installed.

Performance (*Bhp includes 18% drive loss)

Qty	Catalog Number	Flow (CFM)	SP (inwc)	Fan RPM	Power* (HP)
1	109C28	675	.600	1567	.135

Altitude (ft): 62 Temperature (F): 70

Motor Information

HP	RPM	Volts/Ph/Hz	Enclosure	Mounted
1/6	1725	115/1/60	ODP -SE	Yes

Dimensions (inches)

A	2-7/8
B	23-9/16
C	21-1/8
O	2
T Sq.	18
Roof Open.Sq.*	13-1/2

NOTE: Accessories may affect shipping weight.

Shipping Weight(lbs)**	74

*Roof opening size for curbs supplied by Cook only.
**Includes fan, motor & accessories.

Sound Data Inlet Sound Power by Octave Band

1	2	3	4	5	6	7	8	LwA	dBA	Sones
68	70	74	67	61	58	53	49	70	59	6.9

Accessories:

STD DISCONNECT PREWIRED
ROOF CURB RCG 18-13.5H

Fan Curve

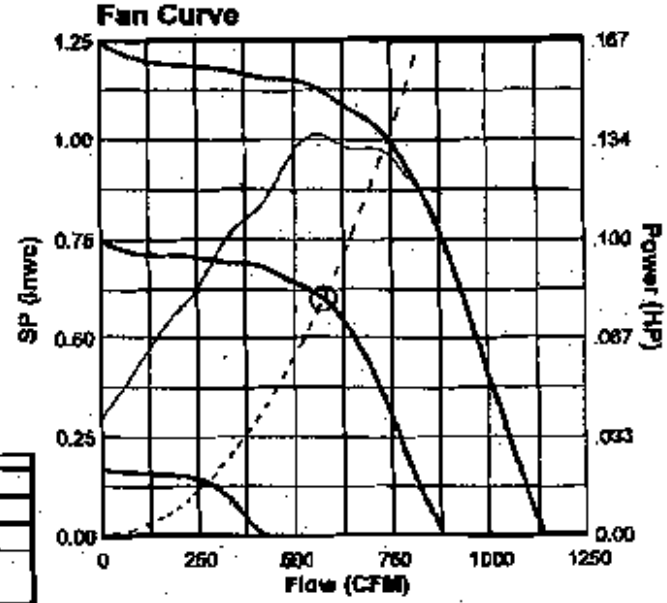

Fan Curve Legend

CFM vs SP (1567)	
MaxRPM(2013)	
MinRPM(740)	
CFM vs HP	
Point of Operation	○
System Curve	

v5.7 TE11001

COOK

MARK:	EF06
PROJECT:	110 FREE ST.
DATE:	4/28/2010

ACE-D

Downblast Centrifugal
Exhaust Ventilator
Roof Mounted/Direct Drive

STANDARD CONSTRUCTION FEATURES:

All aluminum housing - Backward inclined aluminum wheel - Two piece top cap with stainless steel quick release latches (class 120 + 180) - Welded curb cap corners - Birdscreen - Permanently lubricated ball bearing motors - Corrosion resistant fasteners - Transit tested packaging.

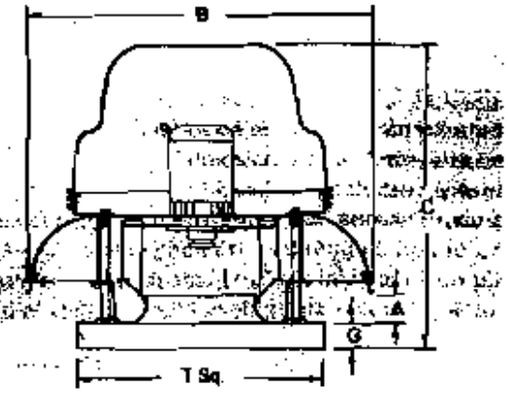

Performance

Qty	Catalog Number	Flow (CFM)	SP (inwc)	Fan RPM	Input Watts
1	100C15DH	350	.600	1396	109

Altitude (ft): 62 Temperature (F): 70

Motor Information

HP	RPM	Volts/Ph/Hz	Enclosure
1/8	1550	115/1/60	ODP -SE

Dimensions (inches)

A	2-1/2
B	18-3/4
C	16-13/16
G	2
T Sq.	16
Roof Open. Sq.*	13-1/2

NOTE: Appearance may affect dimensions shown.

Shipping Weight(lbs)***	58

* Roof opening size for units supplied by Cook only.
***Reflects fan, motor & accessories.

Sound Data Inlet Sound Power by Octave Band

1	2	3	4	5	6	7	8	LwA	dBA	Sones
70	72	77	63	55	63	49	47	70	58	8.9

Accessories:

STD DISCONNECT PREWIRED
ROOF CURB RCG 16-13.5H
FAN SPEED CONTROLLER 5 AMP 120 VOLT

Fan Curve

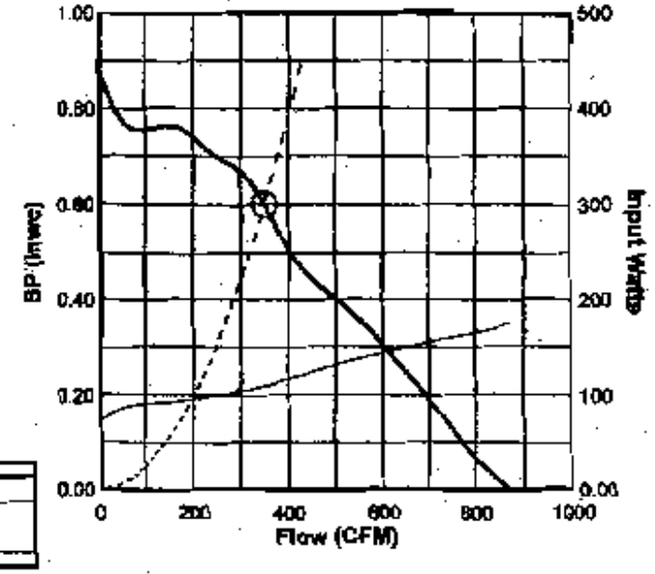

Fan Curve Legend	
CFM vs SP	———
CFM vs Watts	———
Point of Operation	○
System Curve	———

v5 7.73.1 (05)

COOK

MARK:	EF07
PROJECT:	110 FREE ST.
DATE:	4/28/2010

ACE-B

Downblast Centrifugal
Exhaust Ventilator
Roof Mounted/Belt Drive

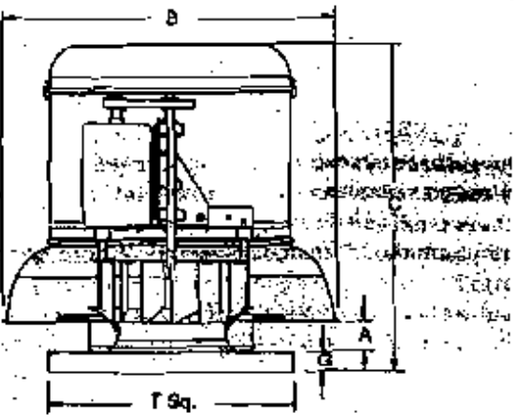

STANDARD CONSTRUCTION FEATURES:

All aluminum housing - Backward inclined all aluminum wheel - Two piece top cap with stainless steel quick release latches - Welded curb cap corners - Birdscreen - Vibration isolators - Lifting Lugs - Permanently lubricated ball bearing motors - Oil and heat resistant, static conducting belts - Adjustable pitch drives through 5 hp motor - Corrosion resistant fasteners - Regreasable bearings in a cast iron pillow block housing, rated at 200,000 hours average life - All fans factory adjusted to specified fan RPM - Transit tested packaging - Standard motors ehp factory installed.

Performance (*Bhp includes 12% drive loss)

Qty	Catalog Number	Flow (CFM)	SP (inwc)	Fan RPM	Power* (HP)
1	195C6B	3000	.800	849	.587

Altitude (ft): 62 Temperature (F): 70

Motor Information

HP	RPM	Volts/Ph/Hz	Enclosure	Mounted
3/4	1725	460/3/60	ODP -SE	Yes

Dimensions (Inches)

A	4-7/16
B	37-11/16
C	35
G	3
T Sq.	30
Roof Open.Sq.*	25-1/2

NOTE: Accessories are sized dimensions shown.

Shipping Weight(lbs)**	170

*Roof opening size for curbs supplied by Cook only.
**Includes fan, motor & accessories.

Sound Data Inlet Sound Power by Octave Band

1	2	3	4	5	6	7	8	LwA	dBA	Sones
74	75	74	69	64	60	54	51	71	60	6.8

Accessories:

STD DISCONNECT PREWIRED
ROOF CURB RCG 28-13.5H

Fan Curve

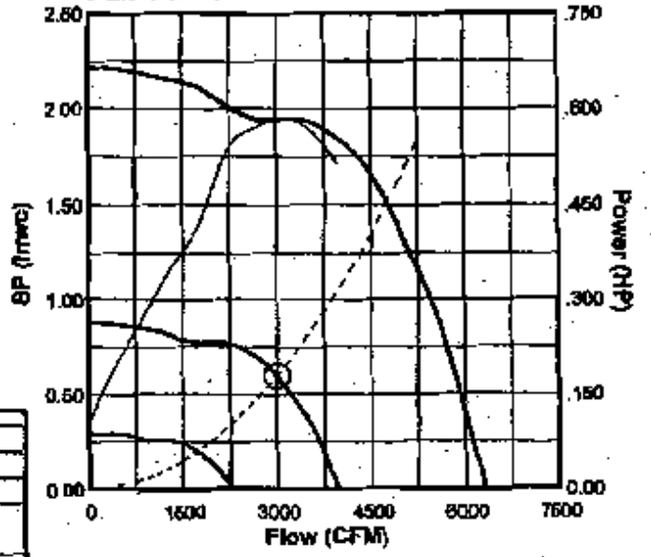

Fan Curve Legend
- CFM vs SP (849)
- MaxRPM(1346)
- MinRPM(490)
- CFM vs HP
- Point of Operation
- System Curve

v6.7.75.11061

COOK

changed to in line

MARK: EF08
PROJECT: 110 FREE ST.
DATE: 4/28/2010

ACE-D

Downblast Centrifugal Exhaust Ventilator Roof Mounted/Direct Drive

STANDARD CONSTRUCTION FEATURES:

All aluminum housing - Backward inclined all aluminum wheel - Two piece top cap with stainless steel quick release latches (sizes 120 - 180) - Welded curb cap corners - Birdscreen - Permanently lubricated ball bearing motors - Corrosion resistant fasteners - Transit tested packaging.

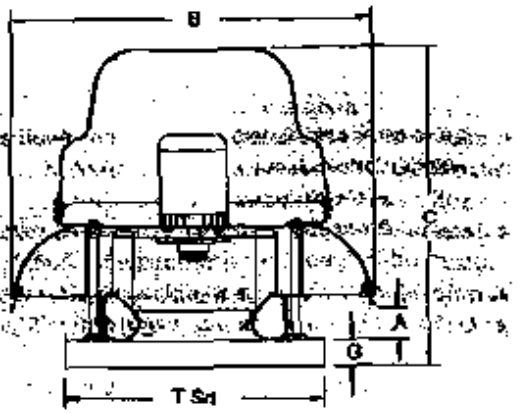

Performance

Qty	Catalog Number	Flow (CFM)	SP (inwc)	Fan RPM	Input Watts
1	90C16DL	100	.500	1319	60

Altitude (ft): 62 Temperature (F): 70

Motor Information

HP	RPM	Volts/Ph/Hz	Enclosure
1/8	1550	115/1/60	ODP -CE

Dimensions (inches)

A	2-1/2
B	18-3/4
C	16-13/16
G	2
T Sq.	18
Roof Open. Sq.*	13-1/2

NOTE: Accessories may alter dimensions shown.

Shipping Weight(lbs)**	50

* Roof opening size for curbs supplied by Cook only.
** Includes fan, motor & accessories.

Sound Data Inlet Sound Power by Octave Band

1	2	3	4	5	6	7	8	LwA	dBA	Sones
62	57	62	52	46	44	41	40	56	45	3.9

Accessories:

STD DISCONNECT PREWIRED
ROOF CURB RCG 16-13.5H
FAN SPEED CONTROLLER 5 AMP 120 VOLT

Fan Curve

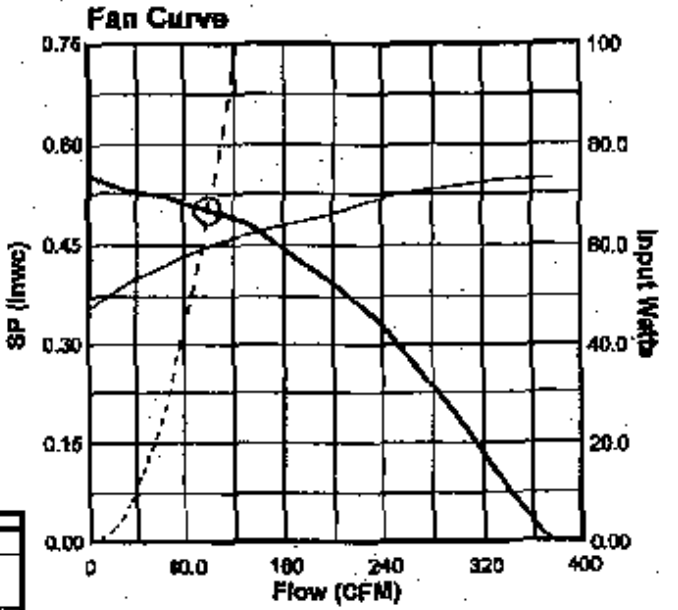

Fan Curve Legend

CFM vs SP	—
CFM vs Watts	—
Point of Operation	○
System Curve	—

COOK

Deleted

MARK: EF09	
PROJECT: 110 FREE ST.	
DATE: 4/28/2010	

DB

Duct Blower
Internal Belt Drive

STANDARD CONSTRUCTION FEATURES:

Galvanized steel housing - Permanently lubricated ball bearing motors - Blower/Motor vibration isolated from the housing - Oil and heat resistant, static conducting belts - Bearings rated at 200,000 hours average life - Adjustable pitch drive through 5 hp motor - Corrosion resistant fasteners - Removable side access panel - Horizontal hanging brackets - All fans factory adjusted to specified fan RPM.

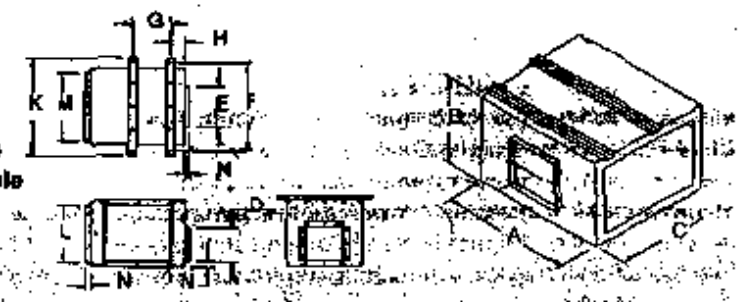

Performance (*Bhp includes 5% drive loss)

Qty	Catalog Number	Flow (CFM)	SP (inwc)	Fan RPM	Power* (HP)
1	DB-15	5000	.250	888	1.60

Altitude (ft): 62 Temperature (F): 70

Motor Information

HP	RPM	Volts/Ph/Hz	Enclosure
2	1725	460/3/60	ODP -PE

Motor efficiency exceeds EPACT requirements

Sound Data Inlet Sound Power by Octave Band

1	2	3	4	5	6	7	8	LwA	dBA	Sones
85	86	82	79	77	73	70	65	82	71	20

Accessories:

Premium Efficiency Motor (Min. 86.5%)
STD DISCONNECT PREWIRED
RC-125 SET(4) - ISOLATORS

Dimensions (inches)

A	32-1/2
B	28-15/16
C	38-1/4
D O.D.	15-7/8
E O.D.	18-5/8
F	38
G	19-1/2
H	3-11/16
K	38
L O.D.	24-15/16

M O.D.	30-1/2
M	1-1/4

NOTE: Accessories may affect dimensions shown.

Shipping Weight(lbs)**	255

**weights for motor & accessories.

Fan Curve

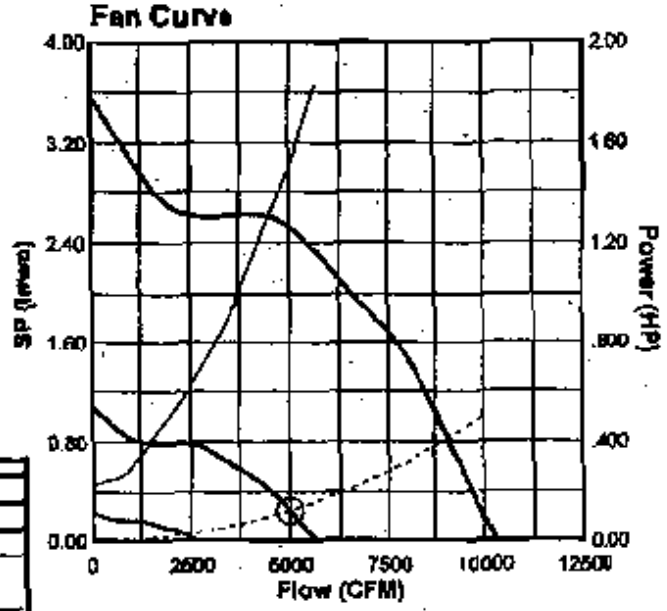

Fan Curve Legend

- CFM vs SP (988)
- MaxRPM(1211)
- MinRPM(913)
- CFM vs HP
- Point of Operation
- System Curve

v3.7.79.11084

COOK

MARK: SF01	
PROJECT: 110 FREE ST.	
DATE: 4/28/2010	

SQN-HP

Centrifugal Square Inline
High Pressure
Belt Drive

STANDARD CONSTRUCTION FEATURES:

All Aluminum wheel - Galvanized steel housing - Three removable access doors - Closed cell neoprene gasketing - Inlet and discharge duct collars - Universal mounting feet - Regreasable bearings in a cast housing rated at 200,000 hours average life - Permanently lubricated ball bearing motor - Adjustable pitch drives through 5 HP - All fans factory adjusted to specified fan RPM - Transit tested packaging.

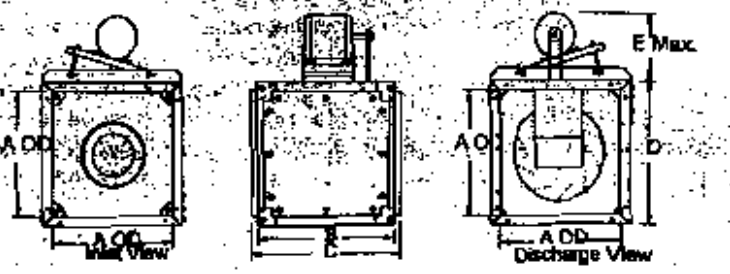

Performance (*Shp includes 15% drive loss)

Qty	Catalog Number	Flow (CFM)	SP (Inwc)	Fan RPM	Power* (HP)
1	135SQN-HP	1000	1.00	1493	.339

Altitude (ft): 62 Temperature (F): 70

Motor Information

HP	RPM	Volts/Ph/Hz	Enclosure	Mounted
1/2	1725	115/1/60	ODP -SE	Yes

Sound Data Inlet Sound Power by Octave Band

1	2	3	4	5	6	7	8	LwA	dBA	Sones
81	79	70	72	69	69	64	57	75	63	12.9

Dimensions (Inches)

A	16
B	20-1/4
C	22-1/4
D	20-3/4
E	12-1/2
Max/MinFrm	145T

NOTE: Accessories may affect dimensions shown.

Shipping Weight(lbs)*	170

*Includes fan, motor & accessories.

Accessories:

THERMAL OVERLOAD MOTOR
STD DISCONNECT PREWIRED
OSHA GUARD/MTR COVER
RC-75 SET(4) - ISOLATORS
9 OCLOCK MOTOR MOUNT - ADJ

Fan Curve

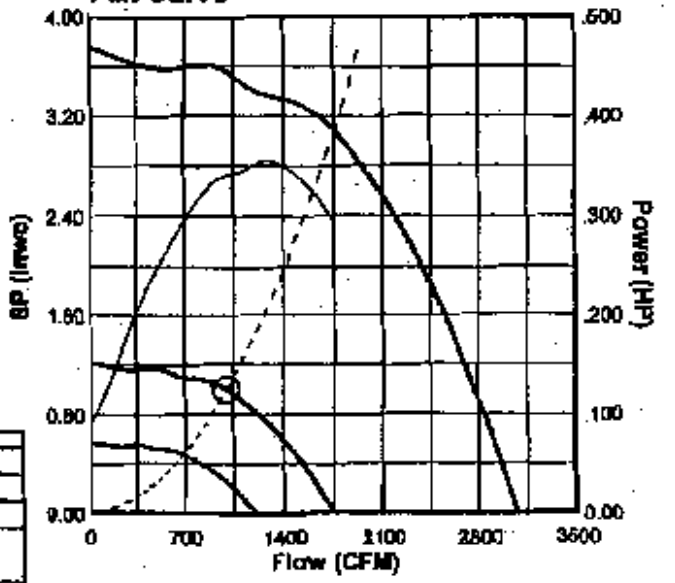

Fan Curve Legend	
CFM vs SP (1493)	
MaxRPM(2822)	
MinRPM(1029)	
CFM vs HP	
Point of Operation	○
System Curve	

v8.7.R6.11051

COOK

MARK: SEF1, SSF1
PROJECT: 110 FREE ST.
DATE: 4/28/2010

CA SWSI

Airfoil Centrifugal Blower
Counterclockwise Top Horizontal
Arrangement 10

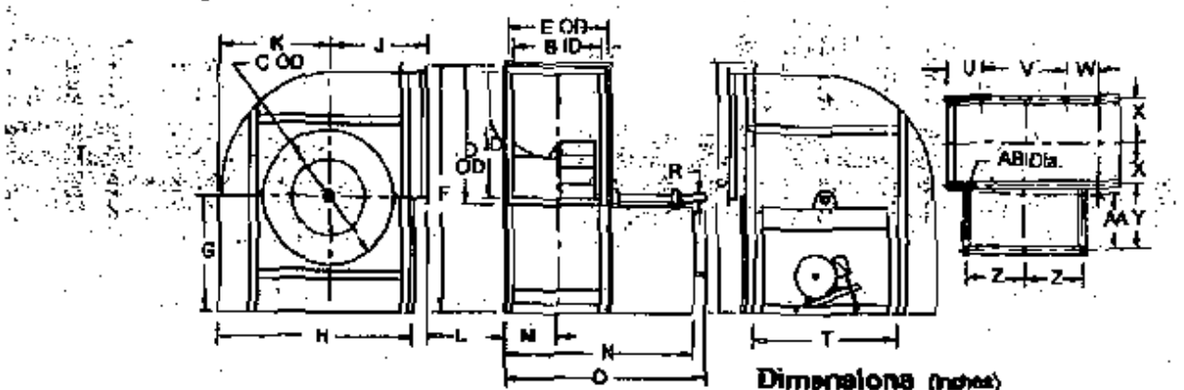

Performance (*Bhp includes 4% drive loss)

Qty	Catalog Number	Flow (CFM)	SP (inwc)	Fan RPM	Power* (HP)
2	600CA-SWSI	60000	2.00	537	33.9

Altitude (ft): 62 Temperature (F): 70

Motor Information

HP	RPM	Volts/Ph/Hz	Enclosure	Mounted
40	1725	460/3/60	ODP -PE	Yes

Motor efficiency exceeds EPACT requirements

Fan Information

Class	OVel(fpm)	Rotation	Discharge	Access
I	2873	CCW	Top Horz.	3.00

Sound Data Inlet Sound Power by Octave Band

1	2	3	4	5	6	7	8	LwA
101	101	94	92	88	83	78	75	94

Dimensions (inches)

A	65-5/8	L	4-7/8	X	24-5/8
B	45-13/16	M	25-15/16	Y	34-3/16
C	68	N	85-11/16	Z	33-3/4
D	70	O	93-11/16	AA	31-3/4
E	50-3/16	P	129-3/8	AB	1-1/16
F	129-3/8	R	2-15/16		
G	59	T	69-1/2		
H	105	U	18-1/16		
J	51-15/16	V	84		
K	67-15/16	W	22		

NOTE: Accessories may affect dimensions shown.

Shipping Weight(lbs)**	4924

**Includes fan, motor & accessories.

Accessories:

Premium Efficiency Motor (Min. 94.1%)
1IL-1L81 (SMOKE CTRL)
STL ACC DOOR-HINGE
STEEL DRAIN
STEEL WEATHER COVER
HEAT SHIELD
ISOLATION RAILS-SPRG
CONCENTRIC LOCK BRGS
SF-1250 SET(4) - ISOLATORS
S/S SHAFT
HOT DIP VIB ISO
DISCONNECT SHIPPED LOOSE ON 60HP

Fan Curve

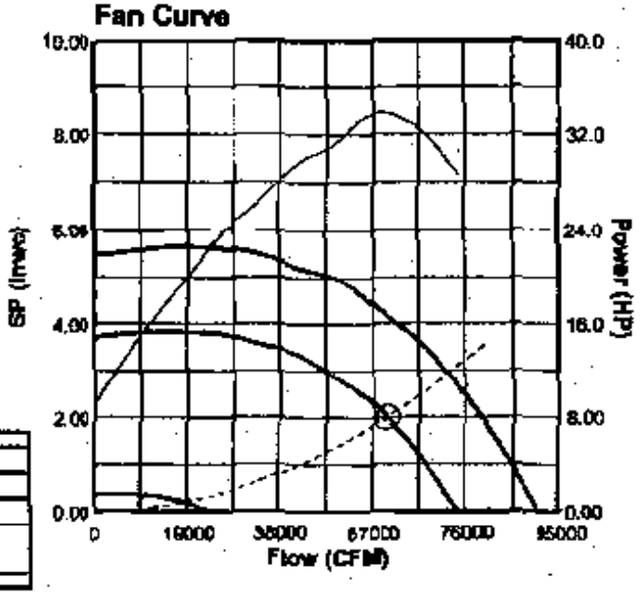

Fan Curve Legend

CFM vs SP (537)	
Max RPM (647)	
Min RPM (161)	
CFM vs HP	
Point of Operation	○
System Curve	

v6.7.R.1105

COOK

MARK: SEF2
PROJECT: 110 FREE ST.
DATE: 4/28/2010

CA SWSI

Airfoil Centrifugal Blower
Counterclockwise Top Horizontal
Arrangement 10

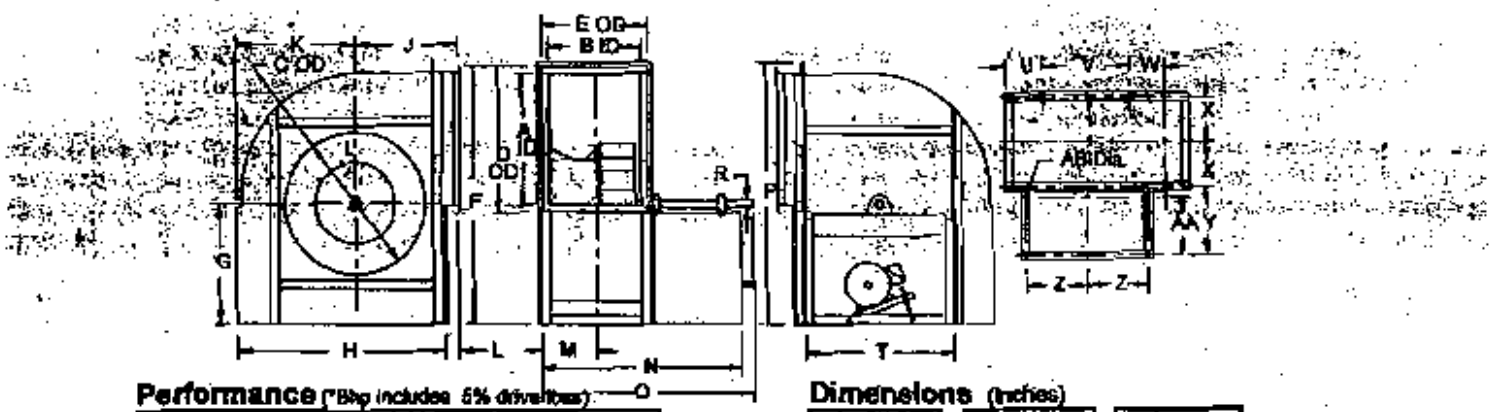

Performance (*Bhp includes 5% drive loss)

Qty	Catalog Number	Flow (CFM)	SP (inwc)	Fan RPM	Power* (HP)
1	445CA-SWSI	30000	1.00	808	10.8

Altitude (ft): 62 Temperature (F): 70

Motor Information

HP	RPM	Volts/Ph/Hz	Enclosure	Mounted
15	1725	460/3/60	ODP -PE	Yes

Motor efficiency exceeds EPACT requirements

Fan Information

Class	OVel(fpm)	Rotation	Discharge	Access
I	2609	CCW	Top Horz.	3:00

Sound Data Inlet Sound Power by Octave Band

1	2	3	4	5	6	7	8	LwA
96	97	89	87	84	76	73	71	90

Dimensions (inches)

A	48-11/16	L	4-3/4	X	18-3/4
B	34	M	20	Y	30-3/16
C	49-7/16	N	89-15/16	Z	25-1/2
D	52-15/16	O	76-7/16	AA	27-3/4
E	38-3/16	P	96	AB	1-1/16
F	94-1/2	R	2-7/16		
G	44	T	53		
H	77	U	9-13/16		
J	38-9/16	V	46		
K	43-3/16	W	18		

NOTE: According per attached dimensions drawing.

Shipping Weight(lbs)**	2843

**Includes fan, motor & accessories.

Accessories:

Premium Efficiency Motor (Min. 93.0%)
STD DISCONNECT PRE-WIRED FLEX-CONDT
UL-1481 (SMOKE CTRL)
STL ACC DOOR-HINGE
STEEL DRAIN
STEEL WEATHER COVER
HEAT SHIELD
ISOLATION RAILS-SPRG
CONCENTRIC LOCK BRGS
SF-1250 SET(4) - ISOLATORS
S/S SHAFT
HOT DIP VIB ISO

Fan Curve

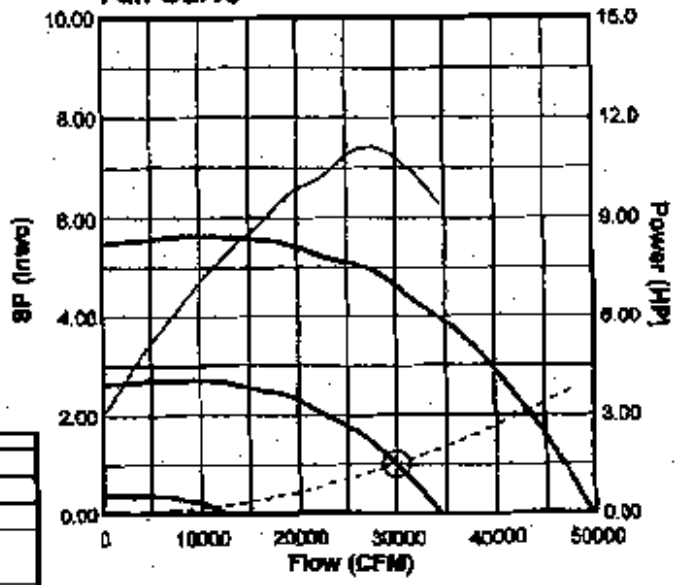

Fan Curve Legend

CFM vs SP (696)	
MaxRPM(873)	
MinRPM(226)	
CFM vs HP	
Point of Operation	○
System Curve	

v6.7.5.11061

COOK

MARK: BEF3	
PROJECT: 110 FREE ST.	
DATE: 4/28/2010	

CA SWSI

Airfoil Centrifugal Blower
Clockwise Top Horizontal
Arrangement 10

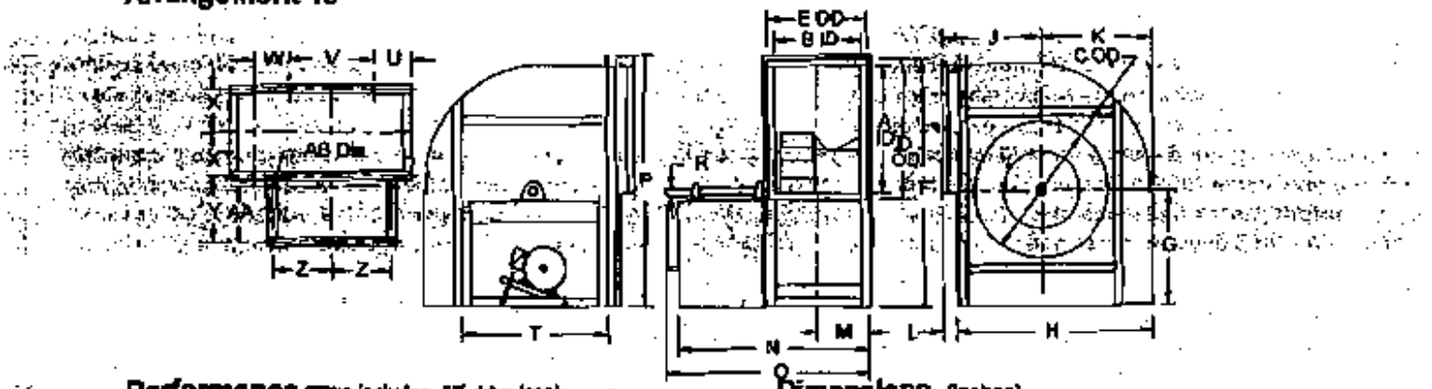

Performance (*Bhp includes 6% drive loss)

Qty	Catalog Number	Flow (CFM)	SP (Inwc)	Fan RPM	Power* (HP)
1	445CA-SWSI	30000	1.00	608	10.8

Altitude (ft): 62 Temperature (F): 70

Motor Information

HP	RPM	Volts/Ph/Hz	Enclosure	Mounted
15	1725	460/3/60	ODP -PE	Yes

Motor efficiency exceeds EPACT requirements

Fan Information

Class	OVel(fpm)	Rotation	Discharge	Access
I	2609	CW	Top Horz.	9:00

Sound Data Inlet Sound Power by Octave Band

1	2	3	4	5	6	7	8	LwA
95	97	89	87	84	79	73	71	90

Dimensions (Inches)

A	48-11/16	L	4-3/4	X	18-3/4
B	34	M	20	Y	80-3/16
C	49-7/16	N	69-15/16	Z	25-1/2
D	62-15/16	O	75-7/16	AA	27-3/4
E	38-3/16	P	96	AB	1-1/16
F	94-1/2	R	2-7/16		
G	44	T	59		
N	77	U	9-13/16		
J	38-9/16	V	48		
K	43-3/16	W	16		

NOTE: Accessories may affect dimensions shown.

Shipping Weight(lbs)***	2844

***Includes fan, motor & accessories.

Accessories:

Premium Efficiency Motor (Min. 93.0%)
STD DISCONNECT PRE-WIRED FLEX-CONDT
UL-1L81 (SMOKE CTRL)
STL ACC DOOR-HINGE
STEEL DRAIN
STEEL WEATHER COVER
HEAT SHIELD
ISOLATION RAILS-SPRG
CONCENTRIC LOCK BRGS
SF-1250 SET(4) - ISOLATORS
S/S SHAFT
HOT DIP VIB ISO

Fan Curve

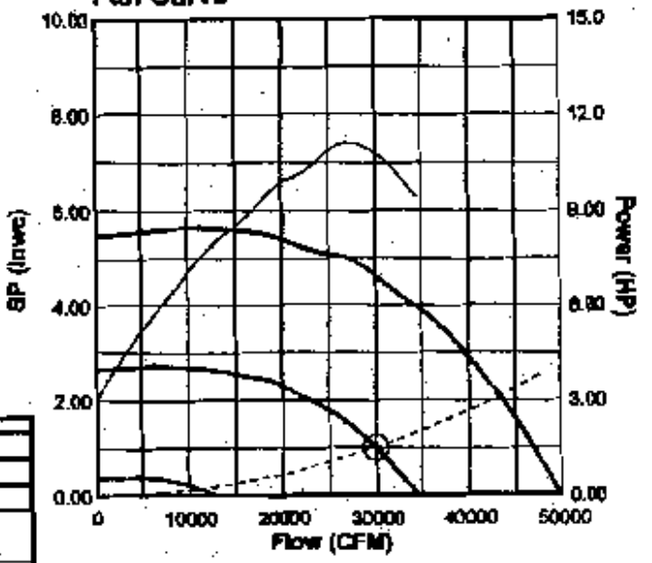

Fan Curve Legend

CFM vs SP (608)	
MaxRPM(673)	
MinRPM(328)	
CFM vs HP	
Point of Operation	○
System Curve	

v5.7.73.11051

COOK

PROJECT: 110 FREE ST.
DATE: 4/28/2010

RCG

Galvanized Steel Roof Curb

STANDARD CONSTRUCTION FEATURES:

18 gauge galvanized steel - 1-1/2", 3 lbs. density thermal and acoustical insulation - Continuously welded corners - Wood nailer.

Options: (As noted below)
1) No wood nailer (deduct 1-1/2" for actual height).
2) Damper tray.

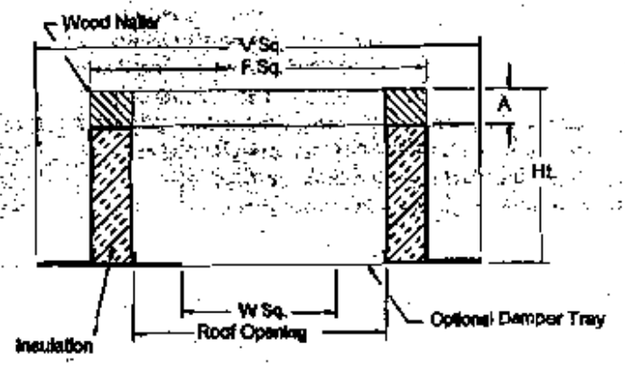

Dimensions (inches)

Mark	Qty	Description	Ht	Options*	A	F Sq.	V Sq.	W Sq.	Roof Opening
EF01	1	RCG 22	18	-	1-1/2	22-1/2	26-1/2	15-3/4	19-1/2
EF02	1	RCG 18	13.5	-	1-1/2	18-1/2	20-1/2	9-3/4	13-1/2
EF03	1	RCG 16	13.5	-	1-1/2	16-1/2	20-1/2	9-3/4	13-1/2
EF04	1	RCG 18	13.5	-	1-1/2	18-1/2	22-1/2	11-3/4	15-1/2
EF05	1	RCG 18	13.5	-	1-1/2	18-1/2	20-1/2	9-3/4	13-1/2
EF06	1	RCG 16	13.5	-	1-1/2	16-1/2	20-1/2	9-3/4	13-1/2
EF07	1	RCG 28	13.5	-	1-1/2	28-1/2	32-1/2	21-3/4	25-1/2
EF08	1	RCG 16	13.5	-	1-1/2	16-1/2	20-1/2	9-3/4	13-1/2

COOK

PROJECT: 110 FREE ST.
DATE: 4/28/2010

HINGED BASE

Kit Assembly

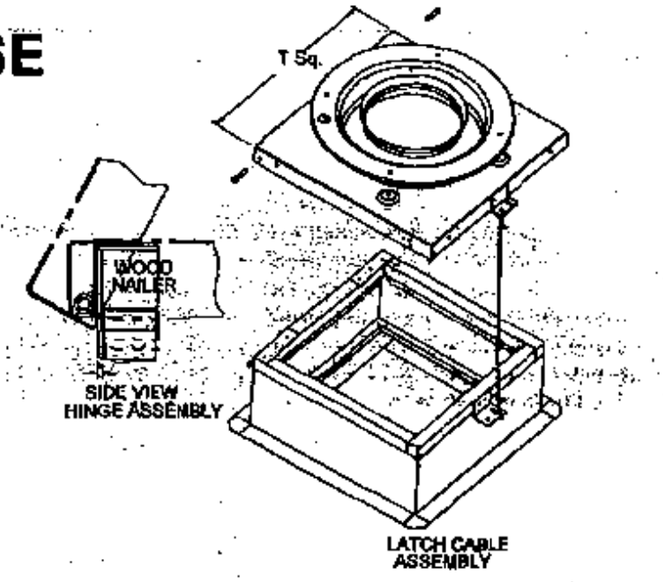

Dimensions (inches)

Mark	Qty	Description
EF01	1	HINGED BASE KIT

COOK

PROJECT: 110 FREE ST.
DATE: 4/28/2010

Grease Terminator 2

Assembly and Installation

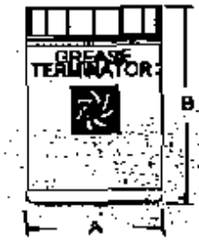

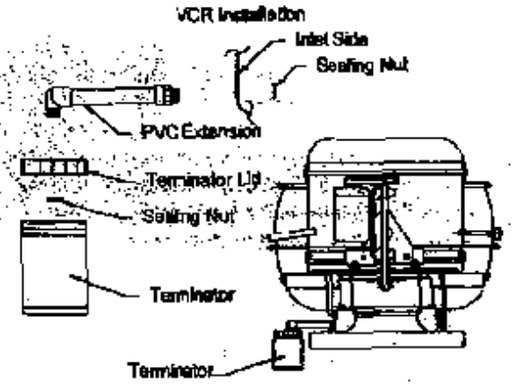

Dimensions (inches)

Mark	Qty	Description	A	B
EF01	1	GREASE TERMINATOR	4-13/16	8-3/4

v5.7.78.11061

COOK

PROJECT: 110 FREE ST.
DATE: 4/26/2010

FSC

Fan Speed Controls

STANDARD CONSTRUCTION FEATURES:

PRODUCT DESCRIPTION - Through the "Quadrac" integrated semi-conductor device it is now possible to offer this system with many advantages. Fewer semi-conductor parts mean greater reliability and the passivation process used in the manufacture of the semi-conductor insures long life. Printed circuit construction eliminates wiring difficulties and guarantees workmanship. All of these factors serve to offer the most important of all features - quality.

SPEED CONTROL - Positive ON/Off action in the control dial. Speed range set to the customer's requirements. CONTROL RATING - 120 volts, 60 cycles, 1 phase. Maximum ambient temperature - 120 degree F (5 AMP, 10 AMP, 15 AMP). 220/240 volt, 50/60 cycles, 1 phase. Maximum ambient temperature - 120 degree F (5 AMP, 10 AMP). 220/240 volt model not UL listed. Fan cannot have UL listing if furnished with prewired 220/240 volt FSC. 277 volt, 60 cycles, 1 phase. Maximum ambient temperature - 120 degree F (5 AMP). WARNING - Power must be turned off before installing this unit. STANDARD INSTALLATION - Fits any standard single gang box. Turn off power and connect the two wires on the control to the two switch wires in the usual manner. The connection box is not supplied. SPECIAL FEATURES - Complete range control, solid state "Quadrac" integrated circuitry, solid state construction for long reliable operating life, saves on electric bills.

Dimensions (inches)

Mark	Qty	Description
EF01	1	FSC 5 AMP 120 VOLT
EF02	1	FSC 5 AMP 120 VOLT
EF03	1	FSC 5 AMP 120 VOLT
EF04	1	FSC 5 AMP 120 VOLT
EF06	1	FSC 5 AMP 120 VOLT
EF08	1	FSC 5 AMP 120 VOLT

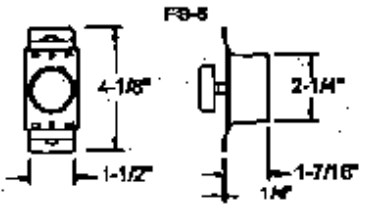

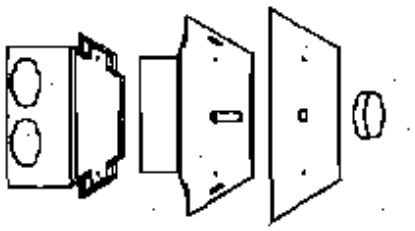

FS-10

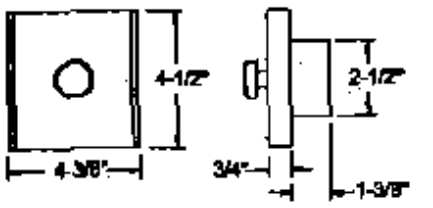

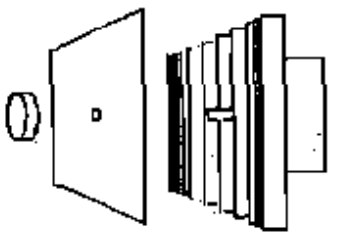

WIRING DIAGRAM

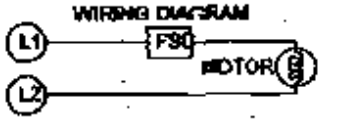

COOK

PROJECT: 110 FREE ST.
DATE: 4/28/2010

MOTOR COVER

STANDARD CONSTRUCTION FEATURES:

18 ga. Galvanized steel - Meets OSHA requirements.

Options:

Lorenized coating.

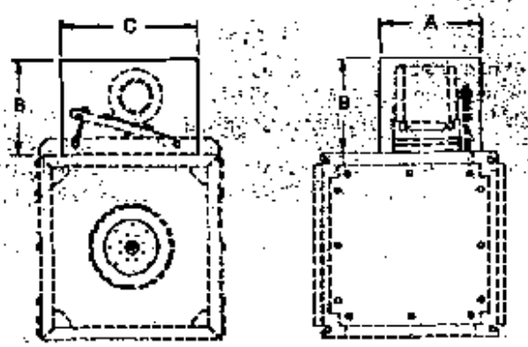

Dimensions (inches)

Mark	Qty	Description	A	B	C
SF01	1	OSHA GUARD/MTR COVER	20	16	15-1/2

v5.7.73.11081

COOK

PROJECT: 110 FREE ST.
DATE: 4/28/2010

RIS CEILING

Rubber-In-Shear Isolator Ceiling Mounted

NOTE:
Dimensions are for informational purposes only - Not for construction.

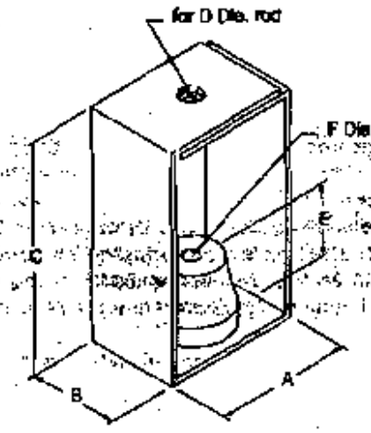

Dimensions (inches)

Mark	Qty	Description	A	B	C	D	E	F
EF09	1	RC-125 SET(4)	2-5/32	1-1/2	2-23/32	11/16	15/32	3/8
SF01	1	RC-75 SET(4)	2-5/32	1-1/2	2-23/32	11/16	15/32	3/8

COOK

PROJECT: 110 FREE ST.
DATE: 4/28/2010

ISOLATION RAIL

Spring Isolation Rail
Floor Mounted
Class I

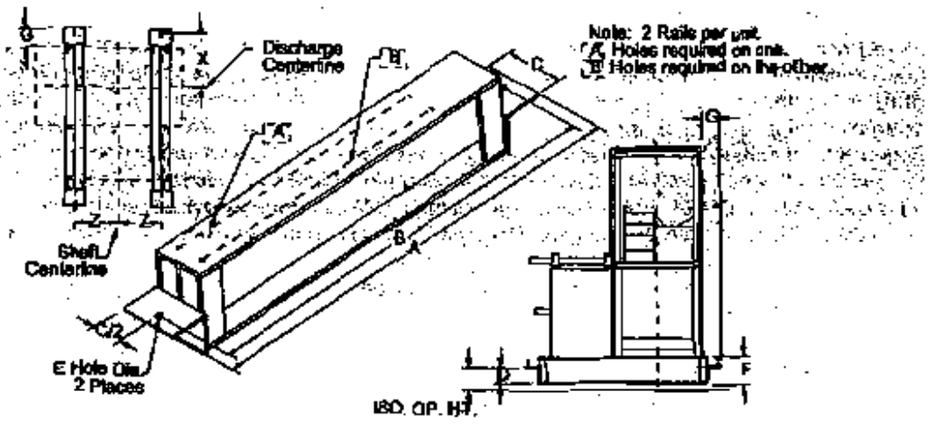

Dimensions (inches)

Mark	Qty	Description	A	B	C	D	E	F	G	X	Z
SEF1, SSF1	2	ISOLATION RAILS-SPRG	97-1/16	93-15/16	6-1/2	4	11/16	6-3/8	5-1/2	29-13/16	32-13/32
SEF2	1	ISOLATION RAILS-SPRG	88-15/16	84-13/16	5-1/2	4-1/8	11/16	5	5-1/2	23-7/16	24-1/2
SEF3	1	ISOLATION RAILS-SPRG	88-15/16	84-13/16	5-1/2	4-1/8	11/16	5	5-1/2	23-7/16	24-1/2

COOK

PROJECT: 110 FREE ST.
DATE: 4/28/2010

SPRING FLOOR

Free Standing Spring Isolator Floor Mounted

NOTE:
All isolators listed are designed to provide a minimum of 50% overload capacity. Standard Spring isolators are rated for 1" deflection.

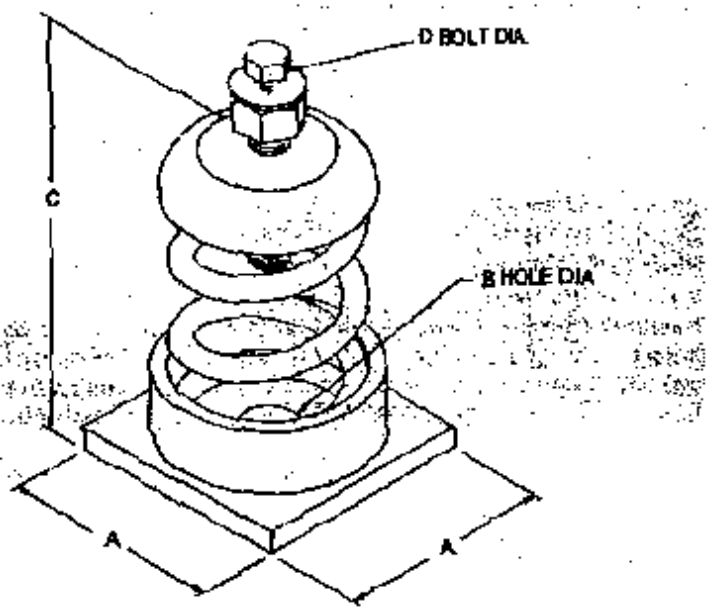

Dimensions (inches)

Mark	Qty	Description	A	B Dia.	C	D Dia.	Outer Color	Inner Color
SEF1, SSF1	2	SF-1250 SET(4)	3-7/8	1	4.20	3/8	Brown	-
SEF2	1	SF-1250 SET(4)	3-7/8	1	4.20	3/8	Brown	-
SEF3	1	SF-1250 SET(4)	3-7/8	1	4.20	3/8	Brown	-