Form # P 04

DISPLAY THIS CARD ON PRINCIPAL FRONTAGE OF WORK

CITY OF PORTLAND

BUILDING PERMIT

Please Read Application And Notes, If Any, Attached

PERMIT ISSUED

Permit Number: 99

This is to certify that MAINEHEALTH /Firesafe Equipment

has permission to install a Non-water based fire suppression System Permit for Kitchen Hood System

AT 110 FREE ST CBL: 039-C001001

NOV - 1

City of Portland

provided that the person or persons, firm or corporation accepting this permit shall comply with all of the provisions of the Statutes of Maine and of the Ordinances of the City of Portland regulating the construction, maintanance and use of buildings and structures, and of the application on file in this department.

Apply to Public Works for street line and grade if nature of work requires such information.

Notification of inspection must be given and written permission procured before this building or part thereof is lath or other covered-in. 24 HOUR NOTICE IS REQUIRED.

A certificate of occupancy must be procured by owner before this building or part thereof is occupied.

OTHER REQUIRED APPROVALS

Fire Dept. Capt. R. Stubbs

Health Dept.

Appeal Board

Other

Department Name

Director - Building & Inspection Services

PENALTY FOR REMOVING THIS CARD

City of Portland, Maine - Building or Use Permit Applicatiou

389 Congress Street, 04101 Tel: (207) 874-8703, Fax: (207) 874-8716

Permit No:	Issue Date:	CBL:
10-1315		039 C001001

Location of Construction:	Owner Name:	Owner Address:	Phone:
110 FREE ST	MAINEHEALTH	465 CONGRESS ST STE 600	
Business Name:	**Contractor Name:**	**Contractor Address:**	**Phone**
	Firesafe Equipment	P.O. Box 1355 Auburn	2077847525
Lessee/Buyer's Name	**Phone:**	**Permit Type:**	**Zone:**
		Fire Suppression System	B-3

Past Use:	Proposed Use:	Permit Fee:	Cost of Work:	CEO District:
Maine Health - Office	Maine Health - Office - install a Non-water based fire suppression Systme Permit for Kitchen Hood System	$40.00	$2,000.00	1

FIRE DEPT: ☑ Approved ☐ Denied
*See Conditions
Signature: KG

INSPECTION: Use Group: U Type: Fire Supp.
IMC 2003
Signature:

Proposed Project Description:
install a Non-water based fire suppression System Permit for Kitchen Hood System

PEDESTRIAN ACTIVITIES DISTRICT (P.A.D.)
Action: ☐ Approved ☐ Approved w/Conditions ☐ Denied
Signature: Date:

Permit Taken By:	Date Applied For:
ldobson	10/20/2010

1. This permit application does not preclude the Applicant(s) from meeting applicable State and Federal Rules.
2. Building permits do not include plumbing, septic or electrical work.
3. Building permits are void if work is not started within six (6) months of the date of issuance. False information may invalidate a building permit and stop all work..

PERMIT ISSUED

NOV - 1 2010

City of Portland

Zoning Approval

Special Zone or Reviews	Zoning Appeal	Historic Preservation
☐ Shoreland	☐ Variance	☑ Not in District or Landmark
☐ Wetland	☐ Miscellaneous	☐ Does Not Require Review
☐ Flood Zone	☐ Conditional Use	☐ Requires Review
☐ Subdivision	☐ Interpretation	☐ Approved
☐ Site Plan	☐ Approved	☐ Approved w/Conditions
Maj ☑ Minor ☐ MM ☐	☐ Denied	☐ Denied
Date: 10/21/10	Date:	Date:

CERTIFICATION

I hereby certify that I am the owner of record of the named property, or that the proposed work is authorized by the owner of record and that I have been authorized by the owner to make this application as his authorized agent and I agree to conform to all applicable laws of this jurisdiction. In addition, if a permit for work described in the application is issued, I certify that the code official's authorized representative shall have the authority to enter all areas covered by such permit at any reasonable hour to enforce the provision of the code(s) applicable to such permit.

SIGNATURE OF APPLICANT | ADDRESS | DATE | PHONE

RESPONSIBLE PERSON IN CHARGE OF WORK, TITLE | DATE | PHONE

CITY OF PORTLAND, MAINE

Department of Building Inspections

Original Receipt

10-20 2010

Received from: Johnson & Sockin

Location of Work: 110 Tree St

Cost of Construction $_____ Building Fee: _____

Permit Fee $_____ Site Fee: _____

Certificate of Occupancy Fee: _____

Total: 40

Building (I1) ___ Plumbing (I5) ___ Electrical (I2) ___ Site Plan (U2) ___

Other _____

CBL: 39-C-1

Check #: 19230 **Total Collected $** 40

No work is to be started until permit issued.
Please keep original receipt for your records.

Taken by: L.A.

WHITE - Applicant's Copy
YELLOW - Office Copy
PINK - Permit Copy

BUILDING PERMIT INSPECTION PROCEDURES

Please call 874-8703 or 874-8693 (ONLY)

or email: buildinginspections@portlandmaine.gov

With the issuance of this permit, the owner, builder or their designee is required to provide adequate notice to the City of Portland Inspection Services for the following inspections. Appointments must be requested 48 to 72 hours in advance of the required inspection. The inspection date will need to be confirmed by this office.

- **Please read the conditions of approval that is attached to this permit!! Contact this office if you have any questions.**
- **Permits expire in 6 months, if the project is not started or ceases for 6 months.**
- **If the inspection requirements are not followed as stated below additional fees may be incurred due to the issuance of a "Stop Work Order" and subsequent release to continue with construction.**

X **Final Inspection required at completion of work performed by the fire department.**

The project cannot move to the next phase prior to the required inspection and approval to continue, REGARDLESS OF THE NOTICE OR CIRCUMSTANCES.

IF THE PERMIT REQUIRES A CERTIFICATE OF OCCUPANCY, IT MUST BE PAID FOR AND ISSUED TO THE OWNER OR DESIGNEE BEFORE THE SPACE MAY BE OCCUPIED.

PERMIT ISSUED

NOV - 1

City of Portland

City of Portland, Maine - Building or Use Permit

389 Congress Street 04101 Tel: (207) 874-8703, Fax: (207) 874-8716

Permit No:	Date Applied For:	CBL:
10-1315	10/20/2010	039 C001001

Location of Construction:	Owner Name:	Owner Address:	Phone:
110 FREE ST	MAINEHEALTH	465 CONGRESS ST STE 600	
Business Name:	**Contractor Name:**	**Contractor Address:**	**Phone**
	Firesafe Equipment	P.O. Box 1355 Auburn	(207) 784-7525
Lessee/Buyer's Name	**Phone:**	**Permit Type:**	
		Fire Suppression System	

Proposed Use:	Proposed Project Description:
Maine Health - Office - install a Non-water based fire suppression Systme Permit for Kitchen Hood System	install a Non-water based fire suppression Systme Permit for Kitchen Hood System

Dept: Zoning **Status:** Approved **Reviewer:** Marge Schmuckal **Approval Date:** 10/21/2010
Note: **Ok to Issue:** ✓

Dept: Building **Status:** Approved with Conditions **Reviewer:** Tammy Munson **Approval Date:** 11/01/2010
Note: **Ok to Issue:** ✓

1) Commercial cooking fire extinguishing systems shall comply with IBC 2003 Sec. 904.11

Dept: Fire **Status:** Approved with Conditions **Reviewer:** Capt Keith Gautreau **Approval Date:** 10/26/2010
Note: **Ok to Issue:** ✓

1) A letter of compliance will be required at the time of final inspection stating:
the date the system was tested for operation, fuel gas shut off, and fire alarm connection if applicable.

2) Hood suppression system shall comply with NFPA 17A, 96, and UL 300 Activation of the suppression system shall activate the fire alarm system if available. A pull test is required. The Class K fire extinguisher and proper signage should be located at the suppression system pull station.

PERMIT ISSUED

NOV - 1 2010

City of Portland

Kitchen Hood Fire System

Non-Water-Based Fire Suppression System Permit

If you or the property owner owes real estate or property taxes or user charges on any property within the city, payment arrangements must be made before permits of any kind are accepted.

Installation address: 110 Free St. Portland, ME CBL: 39 C 1

Exact location: (within structure) Catering Kitchen Hood ground floor rear of building

Type of occupancy(s) (NFPA & ICC): OFFICE / ADMINISTRATION

Building owner: MAINE HEALTH

Managing Supervisor: FIRESAFE Auburn, ME, Charles Atherton License No:

Supervisor phone: 207 784-7525 E-mail:

Installing contractor: SEMICE License No:

Contractor phone: E-mail:

The suppression work to be done will be: New: ⊗ Renovation: ◯ Addition to existing system: ◯

This is an amendment to an existing permit: Yes: ◯ NO ◯ Permit no:

System Type: RANGE GUARD WET CHEMICAL UL 300 (see attached submittal)

NFPA Standard: 17A / 96 Edition:

*Non-NFPA systems are not approved for use within the City of Portland.

COST OF WORK: 2,000 —

PERMIT FEE: $40
($10 PER $1,000 + $30 FOR THE FIRST $1,000)

Download a new copy of this document from www.portlandmaine.gov/fire for every submittal. Attach all working documents as required on electronic PDF's in addition to full sized plans.

RECEIVED
OCT 20 2010
Dept. of Building Inspections
City of Portland Maine

Submit all information to the Building Inspections Department, 389 Congress Street, Room 315, Portland, Maine 04101.

Prior to acceptance of any fire protection system, a complete commissioning and acceptance test must be coordinated with all fire system contractors and the Fire Department, and proper documentation of such test(s) provided.

All installation(s) must comply with NFPA and the Fire Department Technical Standard(s).

Applicant signature: [signature] Date: 10/20/10

Kitchen Hoods
Revised ASI #50 Exhaust Only

GREASEMASTER

Manufacturers of Kitchen Ventilation Systems

PRODUCTS

Hoods
- Model WGS
- Model GSN-2
- Self-Cleaning Hood System
- Model GSB
- Model GMI
- Model GSD-2

Electrical Controls/Fire Systems
Make-Up Air Units
Exhaust Fans
Additional Equipment

Model GSN-2 - Exhaust Only Hood

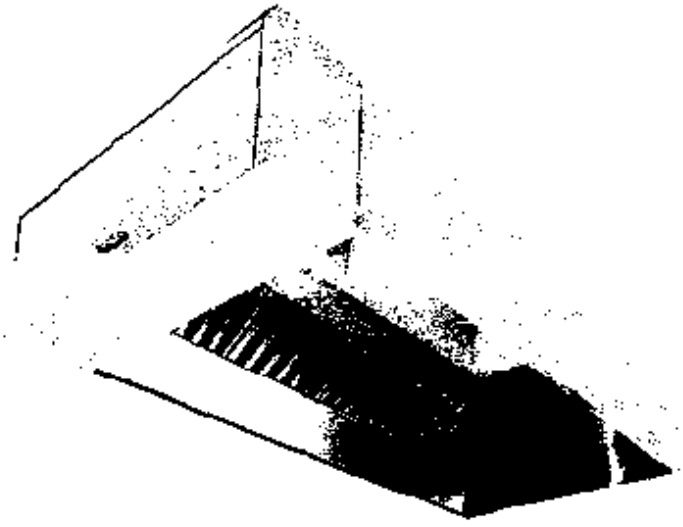

GreaseMaster's GSN-2 Exhaust Only Hood efficiently meets the challenges of most cooking applications.

Features at a Glance
- ETL Listed and ETL Sanitation Listed Product
- Superior Exhaust Flow Rates
- Exceptional Capture and Containment of Cooking Vapors
- Wall or Back-to-Back Island Configurations
- Front Design Directs Air into Filters
- Stainless Steel Construction
- Double Wall, Insulated Front
- Heavy Duty Grease Baffle Filters
- Grease Drain System
- Pre-punched Hanging Angles
- Factory Pre-wired Lighting

Optional Equipment
- Utility Cabinet
- Fire Suppression System
- Electrical Controls
- Front Perforated Supply Plenum
- Rear Make-Up Air Plenum
- Integral Clearance to Combustibles System
- UL Listed Exhaust Fire Damper
- Enclosure Panels to Ceiling
- End Panels
- Type 304 Stainless Steel Construction
  - Exposed Surfaces Only
  - 100% Construction
- Face Mounted Controls
- Filters
  - High Velocity Cartridge Filters
  - Stainless Steel Baffle Type Filters
  - High Efficiency Filters
  - Cartridge combo, - Solo Filters
- Lighting
  - Recessed Incandescent
  - Recessed Fluorescent
- Roof Top Package
- Separate Exhaust and/or Make-Up Air Fans
- Heated Make-Up Air Units
  - Direct Gas Fired Heated Make-Up Air Fans
  - Indirect Gas Fired Heated Make-Up Air Units
  - Electric Heated Make-Up Air Units

Performance Data

Max Avg Cooling	Configuration	Min Exhaust	Recommended Duct

Surface Temp (°F) - Cooking Surface		CFM/ft.	Sizing
450°F Ovens, Steamers, Kettles, Open-Burner Ranges, Griddles, Fryers	Single Wall Hood	150	Exhaust
	2 Wall Hoods Back-to-Back in an Island configuration	300	Based on 1500 FPM
600°F Gas Charbroilers, Electric Charbroilers	Single Wall Hood	300	
	2 Wall Hoods Back-to-Back in an Island configuration	600	
700°F Mesquite Grills, Charcoal Charbroilers, Gas Conveyor Charbroilers	Single Wall Hood	250	
	2 Wall Hoods Back-to-Back in an Island configuration	500	

GSR-2 Specifications

Description The model GSR-2 is a Type I, wall mounted or double island, exhaust canopy used for collection and removal of grease-laden vapors and smoke over all types of residential equipment.

Application The hood shall provide flexibility in designing kitchen ventilation equipment and shall be tested and listed for use over 450°F light/medium duty cooking surfaces; 600°F heavy duty cooking surfaces; and up to 700°F extra heavy duty cooking surfaces.

Construction The hood shall be constructed of type 430 stainless steel with #3 or #4 polish where exposed. All seams shall be welded or in conformance with UL 710 standards. Unexposed surfaces shall be constructed of aluminized steel. Individual component construction shall be determined by manufacturer and ETL. Construction shall be dependent on the structural application to minimize distortion and other defects. All seams, joints and penetrations of the hood where grease-laden vapors and exhaust gases are present must be liquid-tight, continuous welded and in accordance with NFPA 96.

The hood shall be constructed to include:

- A double wall insulated front to eliminate condensation and increase rigidity. The insulation shall have a flexural modulus of 475 EI, meet UL 181 requirements and be in accordance with NFPA 90A and 90B.
- An integral front baffle to direct grease laden vapors toward the exhaust filter bank.
- An integral grease drain system on the hood back with a minimum 1/8" per foot slope, to include an exposed, removable 1/2 pint grease cup to facilitate cleaning.
- A built-in wiring chase for electrical controls on the front face of the hood designed to avoid penetration of the capture area and eliminate the need for an external chaseway.
- UL listed/approved light fixtures and globes, allowing up to a 100 watt standard light bulb, installed and pre-wired to a junction box and installed with a minimum of 3'-6" spacing on center
- Exhaust duct collar 4" high with 1" flange.
- A minimum of four connections for hanger rods. Connectors shall have 9/16" holes pre-punched in 1 1/2" x 1 1/2" angle iron at the factory to allow for hanger rod connection by others.
- UL Classified aluminum baffle filters, with size and quantity determined by the hood's dimensional parameters, but extending the full length of the hood with filter panels not to exceed 6'.

Certifications The hood shall be ETL Listed, comply with UL 710 Standards and shall be built in accordance with NFPA96. Hood shall be tested for compliance with the ETL Sanitation Mark

Documentation Manufacturer shall furnish complete computer generated submittal drawings including hood section view (s), plan view(s), duct sizing, plot CFM and static pressure requirements. Static pressure, air velocity and air volume requirements indicated on drawings shall be precise and accurate and hood shall conform to said specifications. Drawings shall be available to the engineer, architect and owner for their use in construction, operation and maintenance.

Sectional View

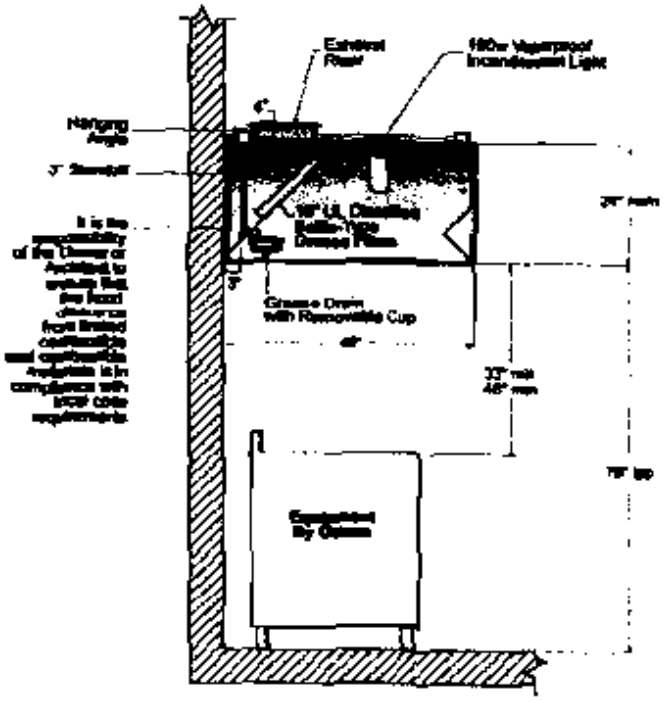

 Copyright © 2008 GreaseMaster.Com. All Rights Reserved.

Kitchen Hood Exhaust Only
Revised ASI # 50

Hood As Drawn.
No MUA Plenum

HOOD INFORMATION

HOOD NO.	MODEL	LENGTH	HOOD DESIGN TEMP.	TOTAL EXH. CFM	EXHAUST HOOD DATA WIDTH	LEDGE	DIA.	CFM	S.P.	TOTAL SUP. CFM	SUPPLY HOOD DATA WIDTH	LEDGE	DIA.	CFM	S.P.	HOOD CONSTRUCTION	HOOD CONTROL END TO END	SPV
1	5424 GSN-2	7' 6.00"	450 [illegible]	1000			12"	1000	-0.300"	0						430 SS Wave Enamel	ALGE	ALGE

HOOD INFORMATION

HOOD NO.	FILTERS TYPE	QTY.	HEIGHT	LENGTH	QTY.	LIGHTS TYPE	WIRE GUARD	LOCATION	FIRE SYSTEM TYPE	MAKE	MECHANICAL MODEL #	EQUIPMENT QUANTITY	LOCATION	FIRE STATION PIPING	HOOD WASHING VENT
1	[illegible]	5	16"	20"	2	Incandescent Light Fixture	[illegible]							[illegible]	[illegible]

HOOD OPTIONS

HOOD NO.	OPTION
1	[illegible]

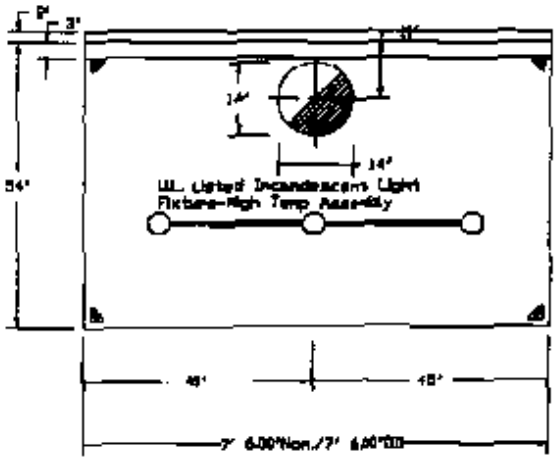

PLAN VIEW – Hood #1
7' 6.00" LONG 5424GSN-2

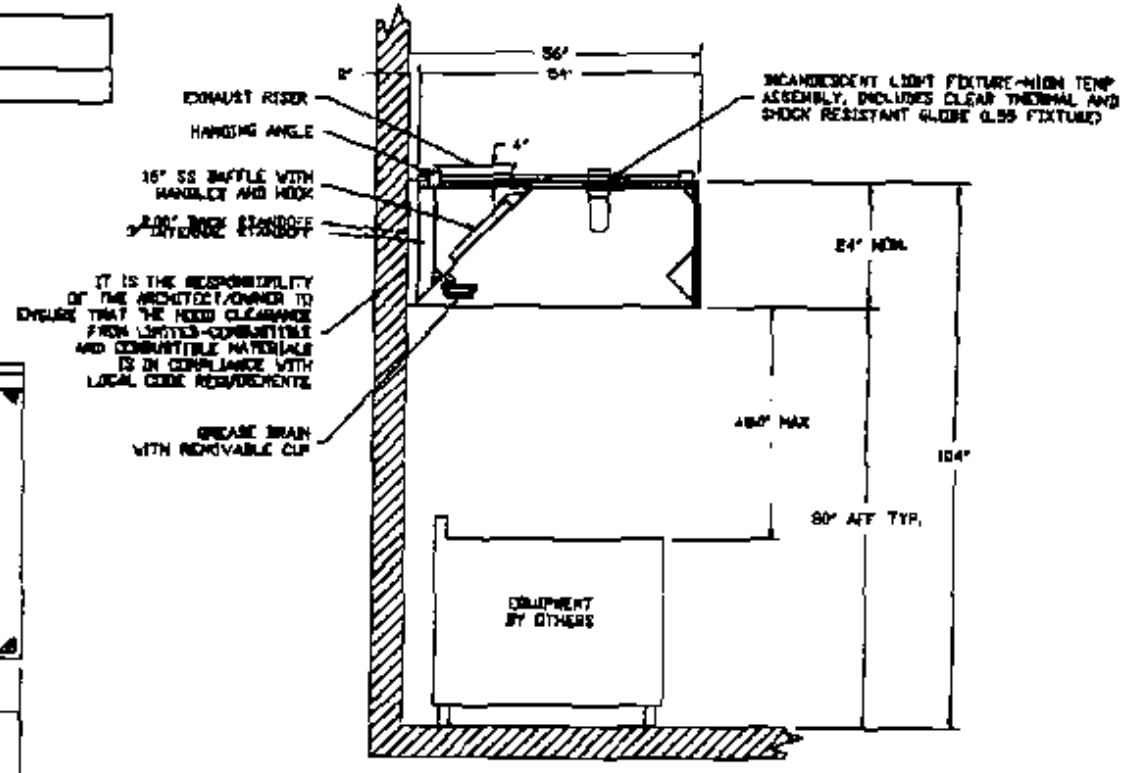

SECTION VIEW – MODEL 5424GSN-2

GREASE MASTER™

JOB	Maine Health
LOCATION	South Portland, ME
DATE 6/15/2010	JOB # 1167631
DWG # 1	DRAWN BY
REV.	SCALE 1/32

REVISED
ASI # 050

EF-01
Kitchen Hood Exhaust Fan

COOK

MARK: KEF1	
PROJECT: AERO - 110 FREE ST. VCR	
DATE: 8/16/2010	

VCR

Upblast Centrifugal
Exhaust Ventilator
Roof Mounted/Belt Drive

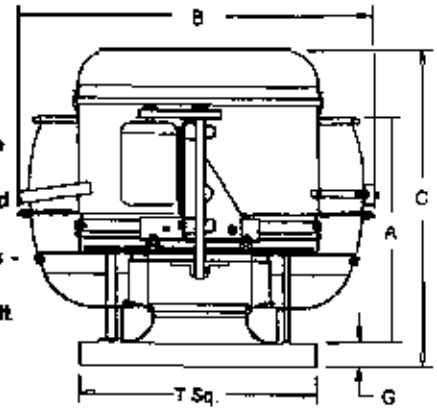

STANDARD CONSTRUCTION FEATURES:

All aluminum housing - Backward inclined all aluminum wheel - Two piece top cap with stainless steel quick release latches - One piece bottom spinning - Welded curb cap corners - Lifting Lugs - Permanently lubricated ball bearing motors - Oil and heat resistant, static conducting belts - Adjustable pitch drives through 5 hp motor - Corrosion resistant fasteners - Regreasable bearings in cast iron pillow block housing, rated at 200,000 hours average life - All fans factory adjusted to specified fan RPM - Transit tested packaging.

Performance (*Bhp includes 13% drive loss)

Qty	Catalog Number	Flow (CFM)	SP (Inwc)	Fan RPM	Power* (HP)
1	150VSB	1500	1.00	1249	.456

Altitude (ft): 62 Temperature (F): 70

Motor Information

HP	RPM	Volts/Ph/Hz	Enclosure	Mounted	TOL
3/4	1725	115/1/60	ODP -SE	Yes	Yes

Sound Data Inlet Sound Power by Octave Band

1	2	3	4	5	6	7	8	LwA	dBA	Sones
81	85	81	69	65	63	58	54	76	64	13.6

Dimensions (inches)

A	20-15/16
B	34-11/16
C	30-1/4
G	2
T Sq.	24
Roof Open. Sq.*	19-1/2

NOTE: Accessories may affect dimensions shown.

Shipping Weight(lbs)**	185

* Roof opening size for curbs supplied by Cook only.
**Includes fan, motor & accessories

Accessories:

PRE-WIRED STD DISCONNECT NEMA 3
ROOF CURB RCG 22-13.5H -LES5 NLR
UL762 (327Y-300DEG)
HINGED SUB BASE 24T
GREASE TERMINATOR
NVE-23 NONVENTED EXT
BELT TENSIONR-ROTARY
SPARE BELT SET

Fan Curve

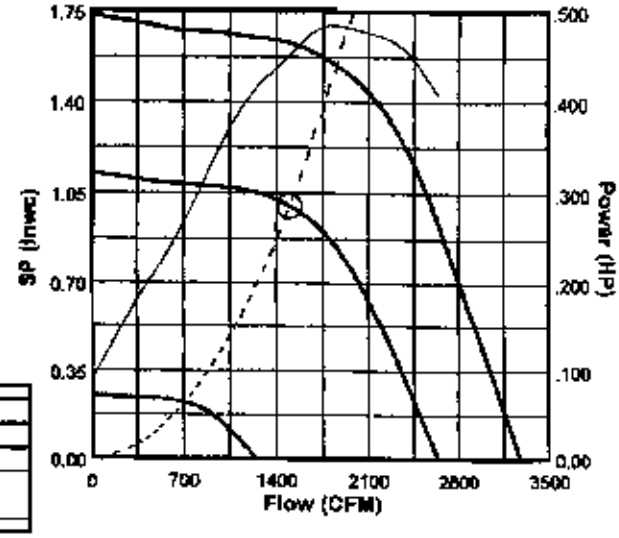

Fan Curve Legend	
CFM vs SP (1249)	
MaxRPM(1650)	
MinRPM(690)	
CFM vs HP	
Point of Operation	○
System Curve	

v5.7.77.11114

COOK

PROJECT: AERO - 110 FREE ST, VCR
DATE: 8/16/2010

RCG

Galvanized Steel Roof Curb

STANDARD CONSTRUCTION FEATURES:

18 gauge galvanized steel - 1-1/2", 3 lbs. density thermal and acoustical insulation - Continuously welded corners - Wood nailer.

Options:(As noted below*)
1) No wood nailer (deduct 1-1/2" for actual height).
2) Damper tray.

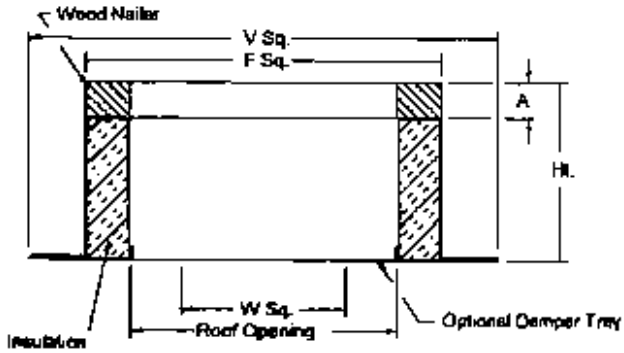

Dimensions (inches)

Mark	Qty	Description	Ht	Options*	A	F Sq.	V Sq.	W Sq.	Roof Opening
KEF 1	1	RCG 22	13.5	1;	1-1/2	22-1/2	28-1/2	15-3/4	19-1/2

COOK

PROJECT: AERO - 110 FREE ST. VCR
DATE: 8/16/2010

Non-Vented Extension

Note: Roof opening size for curbs supplied by Cook only.

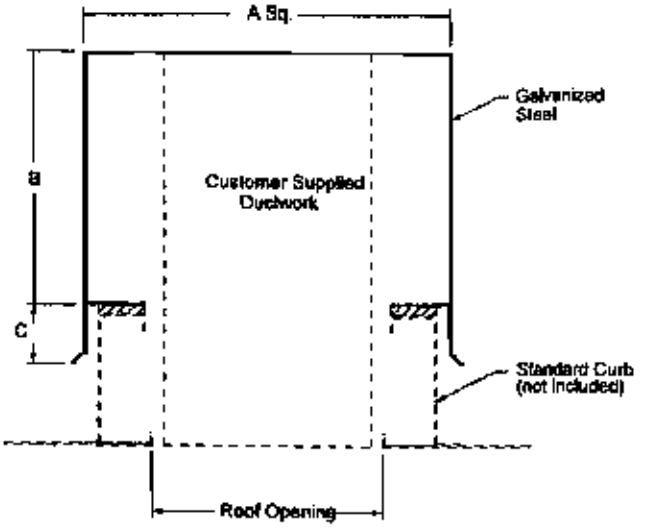

Dimensions (inches)

Mark	Qty	Description	A	B	C	Roof Opening
KEF1	1	NVE-23 NONVENTED EXT	23	16	3-3/4	19-1/2

COOK

PROJECT: AERO - 110 FREE ST. VCR
DATE: 8/16/2010

HINGED BASE

Assembly

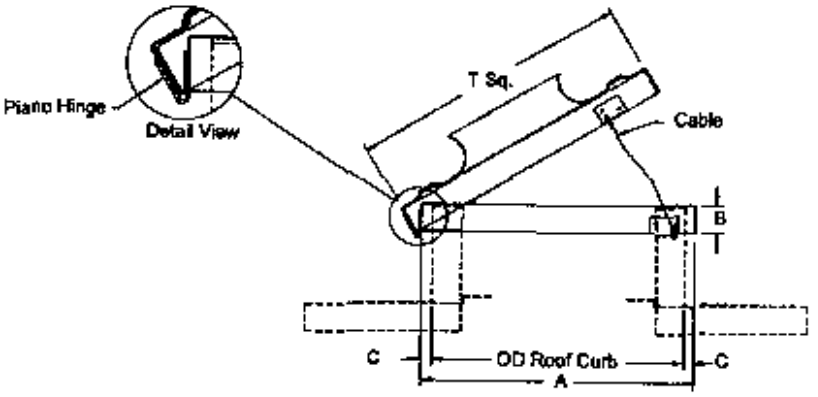

Dimensions (inches)

Mark	Qty	Description	A I.D.	B	C	Cable	OD Curb	T.Sq.
KEF1	1	HINGED SUB BASE 24T	23-3/8	2-1/4	1/4	37	22-1/2	24

COOK

PROJECT: AERO - 110 FREE ST. VCR
DATE: 8/16/2010

Grease Terminator 2

Assembly and Installation

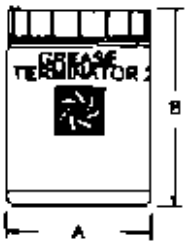

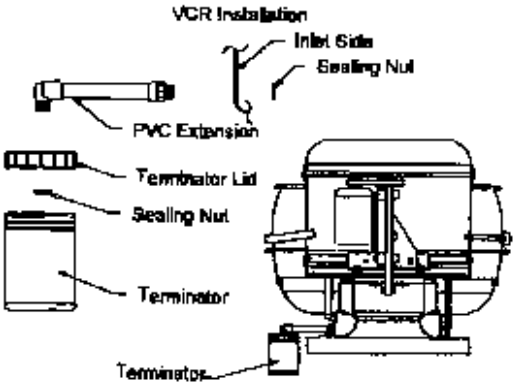

Dimensions (inches)

Mark	Qty	Description	A	B
KEF1	1	GREASE TERMINATOR	4-13/16	8-3/4

Listed & Approved

- Listed by Underwriters Laboratories, Inc., tested to UL 300
- Listed by Underwriters Laboratories of Canada, tested to ULC/ORD-1254C.6
- Conforms to NFPA standards 17A and 96
- New York City MEA approval
- DOT rated steel cylinders

Certified Quality

Badger's Range Guard Wet Chemical Fire Suppression System is made in America in accordance with ISO 9001 certified quality standards.

Features of the System

- Designed to address the total fire hazard
- Flexible piping configurations
- Choice of black, chrome plated and stainless steel piping or stainless steel and brass tubing
- Operating and storage temperature 0°F (-18°C) to 120°F (49°C)
- Factory filled stored pressure cylinders with chrome plated valves
- Valves incorporate pressure gauges for at a glance readiness status
- Cylinders can be piped together to minimize installation cost
- Six temperature heat detectors available for precise hazard specification
- Easily identifiable smaller nozzles with integral strainers and foil bursting discs to protect against blockage during discharge
- Swivel adaptors available for nozzles
- Optional stainless steel enclosure

RANGE GUARD
WET CHEMICAL SYSTEM

All Range Guard systems are designed, installed and serviced by a national network of manufacturer-trained authorized distributors.

Your local contact is...

Badger Fire Protection
4201 Starkville Trail
Charlottesville, VA 22911
Telephone 1-888-448-3957
http://www.badgerfire.com

RANGE GUARD

WET CHEMICAL SYSTEM

Each Range Guard system comes with:

Over 37 Years of Proven Performance

Built-in Cost Savings

World Class Service

BADGER FIRE PROTECTION

fact: *The greatest single cause of fires in eating a*

First with the Best!

- Range Guard®, Badger Fire Protection's Wet Chemical Fire Suppression System, uses KARBALOY, the superior wet chemical agent first developed over 37 years ago. Range Guard was the FIRST, and remains the BEST!
- Range Guard systems guard against
  - facility damage
  - potential injury of personnel and patrons
  - lost profits due to business interruption
- Range Guard systems assure
  - quick fire detection and suppression
  - 24-hour, continual fire protection
  - superior wet chemical coverage that quickly suppresses fires and prevents reflash
  - quick clean up
- Range Guard exceeds UL 300 standards

Fast, Reliable Fire Suppression

...could mean everything to the success of your business!
Rely on Range Guard for:

- **rapid fire detection** with state-of-the-art heat detectors
- **removal of heat source** as Range Guard system automatically turns off appliances
- **immediate fire suppression** as wet chemical agent is sprayed on hazard area with special nozzles designed to give optimal coverage; wet agent provides superior saponification, which quickly snuffs flames and prevents reflash
- **quick, easy clean up** once appliances have cooled, the agent can be easily wiped away from equipment

Range Guard: less hardware, better coverage – better safety, better economics

the competition: more hardware, less effective coverage

2/3

1 drinking establishments is the over-heating of cooking oils and fats.

Easy and Affordable to Install & Maintain

- Range Guard systems offer maximum protection with minimum maintenance
- Range Guard's pre-engineered systems are more cost effective because flexible, versatile system components save on hardware and installation costs
- Range Guard system recharging is fast and economical, great for keeping maintenance costs low
- Range Guard's nozzles can be placed outside the appliance perimeter for ease of installation

More Choice

- **Range Guard gives you optimal control; lots of choices**
  - fire suppression using automatic and/or manual operation modes
- **Custom fit**
  - Range Guard systems are designed to easily fit in any kitchen layout
- **System updates use existing hardware**
  - Range Guard strives to utilize existing system components to implement updates and improvements, making innovations and upgrades more cost effective

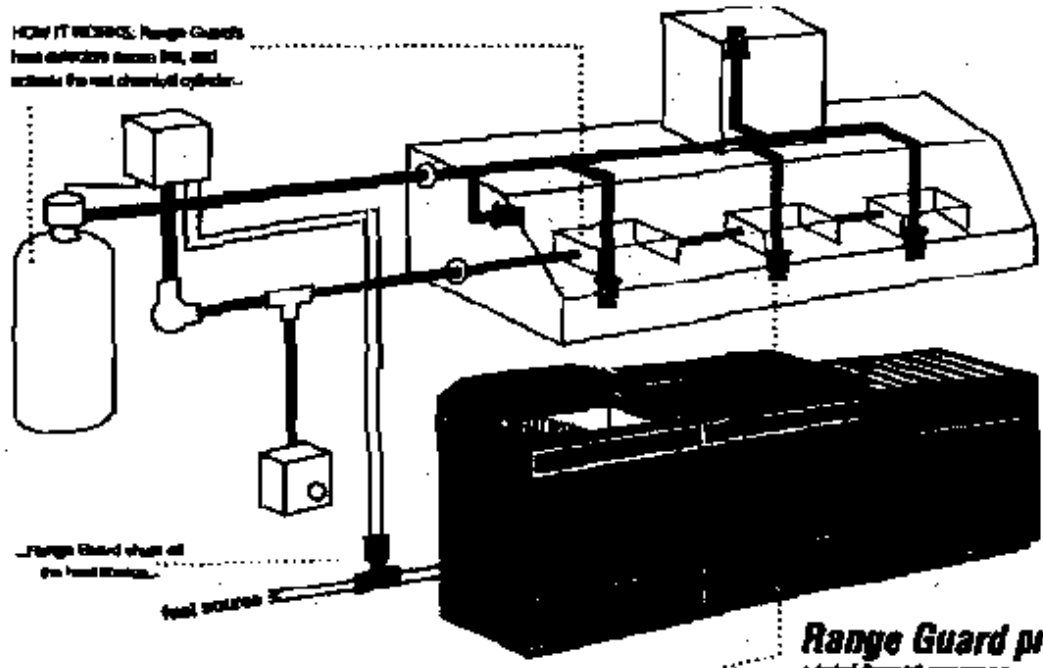

Range Guard provides...

- *total hazard coverage*
- *automatic fuel shutdown*
- *fast flame knockout*
- *cooling and smothering*
- *prevention of reignite*
- *automatic alarm signal*

3/3

Submittal Response

Transmittal ID: 00119
Date Sent: 6/24/2010

Project: MaineHealth, Free Street, Portland, ME
Number: 09146
To: Timothy Schneider
Consigli Construction Co., Inc.
84 Middle Street
Portland, ME 04101
207-791-2518 (Phone)
207-791-2568 (Fax)

Jerry Dorval
Consigli Construction Co., Inc.

Chris Brown
Consigli Construction Co., Inc.
84 Middle Street
Portland, ME 04101
207.791.2519 (Phone)
207.791.2569 (Fax)

From: Timothy Hart
Subject: 230713 Duct Insulation
Sent Via: Email
Submittal ID: 23 07 13-01
Return By:
Action: Approved
Remarks: Approved
CC:

Contents

Quantity: 1 Dated: 6/23/2010 Number:
Description:
230713 A Duct Insulation.pdf
Action
Remarks:

SUBMITTAL

PROJECT:	MAINE HEALTH CARE 110 FREE STREET PORTLAND, MAINE 04101
GENERAL CONTRACTOR:	CONSIGLI 84 MIDDLE STREET PORTLAND, MAINE 04101
ARCHITECT:	HARRIMAN ASSOCIATES 46 HARRIMAN DRIVE AUBURN, MAINE 04210
ENGINEER:	HARRIMAN ASSOCIATES 46 HARRIMAN DRIVE AUBURN, MAINE 04210
SUBCONTRACTOR:	Tri-State Insulation, Inc. P. O. Box 278 Auburn, Maine 04212-0278 Contact: John Field Phone: 207-344-6644 Fax: 207-344-6646
SUPPLIER:	Tri-State Insulation, Inc. P. O. Box 278 Auburn, Maine 04212-0278 Contact: John Field Phone: 207-344-6644 Fax: 207-344-6646
SPECIFICATION SECTION:	230713
PARAGRAPH:	Products 2.5
DRAWINGS:	N/A
ITEM:	DUCT INSULATION FIRE RESISTIVE DUCT WRAP

JOHNSON&JORDAN, INC.
18 Mussey Rd. Scarborough, ME
Approved____ Approved as Noted____
Re-Submit____ Reviewed ✓
Subject to Architects Approval ✓
Date 6/2/10 By [illegible]

MAINE HEALTH CARE
110 FREE STREET
PORTLAND, MAINE

FIRE RESITIVE DUCT WRAP

MANUFACTURER: **3 M**

SUPPLIER: **Tri-State Insulation, Inc.**
P. O. Box 278
Auburn, Maine 04212-0278
Contact: John Field
Phone: 207-344-6644
Fax: 207-344-6646

INSTALLER: **Tri-State Insulation, Inc.**
P. O. Box 278
Auburn, Maine 04212-0278
Contact: John Field
Phone: 207-344-6644
Fax: 207-344-6646

INCLUDES:

3 M Fire Barrier Duct Wrap 15A

TRI-STATE INSULATION, INC

Commercial and Industrial Insulation P.O. BOX 278 * Auburn, Maine 04212-0278

TEL NO. 207-344-8844
FAX NO. 207-344-6846

SUBMITTAL RECAP SHEET

JOB NAME: MAINE HEALTH
LOCATION: PORTLAND, ME

1. FIBERGLASS PIPE INSULATION
   DHW 1-1/4" & LESS = 1/2" TH; 1-1/2" & UP = 1" THICK, ASJ
   DHW 1" & LESS = 1" TH; 1-1/4" - 2" = 1-1/2" THICK, ASJ
   HWS&R 3" & LESS = 1" TH; 4" & UP = 1-1/2" THICK, ASJ

2. PVC FITTING COVERS

3. DUCT WRAP
   UNLINED, CONCEALED SUPPLY DUCT 1-1/2" THICK, .75 PCF, FSK FACING
   CONCEALED ROOF DRAINS 1-1/2" THICK, .75 PCF, FSK FACING

4. MINERAL FIBER (SUBMITTED AS AN APPROVED EQUAL TO CALCIUM SILICATE)
   GENERATOR EXHAUST 4" THICK WITH .016 EMBOSSED ALUMINUM JACKET

5. ALUMINUM JACKET

6. 3-M FIRE BARRIER DUCT WRAP 15A
   KITCHEN HOOD EXHAUST 1-1/2" (2 LAYERS) THICK 3M FIREBARRIER DUCT WRAP.
   2 HOUR RATING WITH ZERO CLEARANCE FROM COMBUSTIBLES.

3M

Fire Barrier Duct Wrap 15A

Duct Wrap Fire Protection for Commercial Kitchen Grease, Ventilation Air and Chemical Exhaust Fume Ducts.

NFPA 96 Compliant 1998 Edition

Complies with International Mechanical Code

Complies with Standard Mechanical Code

Product Data

1. Product Description

3M™ Fire Barrier Duct Wrap 15A is a fire resistant wrap consisting of a patented inorganic blanket encapsulated with a scrim-reinforced foil. It is used to fire rate commercial kitchen grease ducts and is a proven alternative to 1 or 2 hour fire resistant rated shaft enclosures. This mold resistant**, non-asbestos wrap contains a safer fiber construction* and installs easily because of its high flexibility and strength. 3M Fire Barrier Duct Wrap 15A is a single layer fire resistant wrap that has passed the UL1978 test which simulates a grease duct fire. With its excellent insulating capabilities, it is an ideal choice for tight spaces because it protects combustible constructions at zero clearance throughout the entire enclosure system. 3M Fire Barrier 1000 N/S, 1003 S/L and 2000+ Silicone Sealants used in combination 3M Fire Barrier Duct Wrap 15A provide an effective firestop when the duct penetrates fire rated walls and floors.

Features

- One layer wrap for grease ducts rated as a shaft alternative per UL 1978
- Zero clearance to combustible throughout the entire enclosure system for congested spaces
- High flexibility for installation ease
- Foil encapsulated with unique center overlap seam for blanket protection, less dust, and high wrap strength
- Widest range of penetration seal systems
- Stitched edges
- Safer fiber construction*
- Mold resistant in accordance with ASTM C1338-00**

*Has been demonstrated to be soluble in the lungs according to EU guidelines 67/548/EWG, Note Q for bio persistence.
**Standard Test Method for Determining Fungi Resistance of Insulation Materials and Facings

2. Applications

3M Fire Barrier Duct Wrap 15A is an ideal fire resistive enclosure for commercial kitchen grease ducts. It is a proven performance alternative to a 1 or 2 hour fire resistant rated shaft enclosures and provides zero clearance to combustible construction throughout the entire enclosure system. 3M Fire Barrier 1000 N/S, 1003 S/L or 2000+ Silicone Sealant is used in combination with 3M Fire Barrier Duct Wrap 15A to firestop the duct when the duct penetrates fire rated floors and walls.

3. Availability

Product	Unit	Size	Units/ctn.	Wt./ctn.
3M Fire Barrier Duct Wrap 15A	Roll	1.5 in.x 24 in. x 20 ft. (38mm x 60.9cm x 609 cm)	1	53 lbs. 24 kg
3M Fire Barrier Duct Wrap 15A	Roll	1.5 in. x 48 in. x 20 ft. (38mm x 121 cm x 609 cm)	1	106 lbs. 48 kg

4. Typical Physical Properties

Blanket Color: gray/green
Weight: 1.38 lbs./sq. ft. (6.73 kg/sq. m)

5. Performance

3M Fire Barrier Duct Wrap 15A has been tested in accordance with the following:

ASTM C 411	ASTM C 1338
ASTM C 518	ASTM E 136
ASTM E 84	ASTM E 814
ASTM E 119	UL 1978 (Sections 12 & 13)

Surface Burning Characteristics (ASTM E 84)
Foil Encapsulated Blanket:
Flame Spread: 0
Smoke Developed: 0
Blanket:
Flame Spread: 0
Smoke Developed: 0

Thermal Conductivity

Temperature °F (°C)	btu-in./(hr.-ft²-°F)
500 (260)	0.417
1000 (537)	0.922
1500 (815)	1.69
1800 (982)	2.27

For technical data and properties of 3M Fire Barrier 1000 N/S, 1003 S/L and 2000+ Silicone Sealants see separate product data sheets available from your 3M representative or go to www.3m.com/firestop.

Grease Duct Listings

Fire Resistive Rating	Enclosure System	Omega Point Lab. Design Nos. Duct System	Through-Penetration System
1 or 2 hours	1 layer of 3M Fire Barrier Duct Wrap 15A, 3 in. (76 mm) perimeter and longitudinal overlaps	GD 532 F 15A GD 538 F 15A GD 547 F 15A GD 548 F 15A GD 549 F 15A GD 556 F 15A GD 557 F 15A	FS 557 W FS 558 F FS 559 W FS 560 F FS 561 F FS 562 W FS 563 W FS 578 F FS 579 W

Air Ventilation Duct Listings

Fire Resistive Rating	Enclosure System	Omega Point Lab. HVAC Duct System	Through-Penetration System
1 or 2 hours	1 layer of 3M Fire Barrier Duct Wrap 15A, 3 in. (76 mm) perimeter and longitudinal overlaps	VAD529F 15A VAD530F 15A VAD531F 15A VAD534F 15A VAD535F 15A VAD536F 15A VAD542F 15A VAD543F 15A VAD544F 15A VAD545F 15A	FS 565 W 15A FS 566 W 15A FS 567 W 15A FS 568 W 15A FS 569 W 15A FS 570 W 15A FS 571 W 15A FS 572 W 15A FS 573 F 15A FS 574 F 15A FS 576 F 15A

Chemical Exhaust Fume Duct Listings

Fire Resistive Rating	Enclosure System	Omega Point Lab. Chemical Duct System	Through-Penetration System
1 or 2 hours	1 layer of 3M Fire Barrier Duct Wrap 15A , 3 in. (76 mm) perimeter and longitudinal overlaps	CFD500F 15A CFD501F 15A	FS 557 W 15A FS 558 F 15A FS 559 W 15A FS 560 F 15A FS 561 F 15A FS 562 W 15A FS 563 W 15A FS 578 F 15A FS 579 F 15A

Product Approvals

ICC ES Compliance Legacy Report 2161
ICC ES Compliance Legacy Report 2132A
New York City MEA; 147-01-M
California State Fire Marshall; 2440-0941:110

Code Compliance

3M Fire Barrier Duct Wrap 15A complies with requirements of the following codes:

NFPA 96, 1998 Edition
1997 Standard Mechanical Code
1998/2000 International Mechanical Code
1999 BOCA National Building Code
1999 Standard Building Code

This is only a partial list of code compliance. For the latest code and approval information go to www.3m.com/firestop or speak to your authorized 3M distributor or sales representative at (800) 328-1687.

5. Installation Techniques

3M Fire Barrier Duct Wrap 15A system should be installed in accordance with the following installation instructions.

Material and Equipment

- 3M Fire Barrier Duct Wrap 15A blanket, 1-1/2 in. (38 mm) thick, 24 in. (60 cm) or 48 in. (121 cm) wide, 20 ft. (609 cm) standard length. The 48 in. (121 cm) wide blanket helps to minimize waste.
- Aluminum foil tape.
- Minimum 3/4 in. (19 mm) wide filament tape.
- Carbon steel or stainless steel banding material, minimum 1/2 in. (12,7 mm) wide, minimum 0.015 in. (0,38 mm) thick, with steel banding clips.
- Hand banding tensioner, crimping tool, and banding cutter.
- Minimum 12 gauge copper-coated steel insulation pins; galvanized steel or stainless speed clips, minimum
  1-1/2 in. (38 mm) square or 1-1/2 in. (38 mm) dia. round, or equivalent sized insulated cup-head pins; capacitor discharge stud gun.
- Access door hardware: four galvanized steel thread rods, 1/4 in. (6 mm) diameter by 4-1/2 in. to 5 in. long (114 mm to 127 mm) with 1/4 in. (6 mm) wing nuts and 1/4 in. (6 mm) washers: 4 in. (102 mm) long steel hollow tubing to fit threaded rods.
- Minimum 4.0 lb. (1,8 kg) density mineral wool or scrap pieces of 3M Fire Barrier Duct Wrap 15A.
- 3M Fire Barrier 1000 N/S, 1003 S/L or 2000+ Silicone Sealant.

Storage: The 3M Fire Barrier Duct Wrap 15A and 3M Fire Barrier 1000 N/S, 1003 S/L and 2000+ Silicone Sealants must be stored in a dry warehouse environment. Pallets should not be stacked.

Preparatory Work: 3M Fire Barrier Duct Wrap 15A is installed with common tools, such as knives, banders and capacitor discharge guns for applying insulation pins. In order to install the duct firestop system, the surfaces of all the openings and penetrating items need to be clean, dry, frost free and free of dust.

Method: To minimize waste, 3M Fire Barrier Duct Wrap 15A material should be rolled out taufly before measuring. General instructions for installing the 3M Fire Barrier Duct Wrap 15A include a one-layer wrap construction applied directly to the duct. The 3M Fire Barrier Duct Wrap 15A blanket is wrapped around the perimeter of the duct and is cut to a length to overlap itself not less than 3 in. (76 mm). The overlap made by adjacent blankets forms the "longitudinal" overlap. Aluminum foil tape is used to seal all cut edges of the blanket and any tears in the foil scrim.

There are three (3) approved installation techniques for installing the 3M Fire Barrier Duct Wrap 15A (See Figure 1):

1. Telescoping 3 in. (76 mm) Overlap Wrap

With the telescoping overlap wrap method, each blanket overlaps one adjacent blanket, and each blanket has one edge exposed and one edge covered by the next blanket as shown in Figure 1. The visible edges of the perimeter overlaps all point in the same direction.

2. Checkerboard 3 in. (76 mm) Overlap Wrap

With the 3 in. (76 mm) checkerboard overlap wrap method, blankets with both edges exposed alternate with blankets with covered edges, as shown in Figure 1. The visible edges of the perimeter overlaps alternate their directions and appear on every other blanket.

2. Butt Joint With Collar

With the butt joint and collar method, adjacent blankets are butted tightly together and 6 in. (152 mm) wide collar of 3M Fire Barrier Duct Wrap is centered over the joint, overlapping each blanket by 3 in. (76 mm) minimum as shown in Figure 1.

In all three overlap techniques the perimeter overlap can occur at any location on the duct.

The blanket is mechanically attached to the duct by steel banding or by welded insulation pins and clips for all three installation methods listed above.

For Banding Only (See Figure 1)

Filament tape can be used to temporarily hold the blanket in place until the banding is applied. The steel banding is applied around the duct 1-1/2 in. (38 mm) from each edge of the blanket, and maximum 10-1/2 in. (26,7 cm) centers. The banding is placed around the material and tightened so as to sufficiently hold the 3M Fire Barrier Duct Wrap 15A in place against the duct, compressing the foil but not cutting the foil.

Additional Pinning to Prevent Sagging of the Wrap: For Ducts 24 in. (60 cm) and larger in width, additional pins are needed to support the blanket on the bottom horizontal surface and on the outside face of a vertical duct run. Space pins a maximum of 10-1/2 in. (26,7 cm) apart in the direction of the blanket width, and a maximum of 12 in. (30 cm) apart in the direction of the blanket length. Refer to paragraph below for more information on Mechanical Fastening with Pins.

For Mechanical Fastening with Pins Only
Insulation pins are welded to the duct in the centers of the overlaps a minimum of 1-1/2 in. (38 mm) from each edge of the blanket, and spaced a maximum of 10-1/2 in. (26,7 cm) on center along perimeter overlap, and a maximum of 10-1/2 in. (26,7 mm) on center along longitudinal overlaps. The blanket is installed over the pins and held in place by galvanized speed clips. Insulation pins that extend beyond the blanket wrap shall be turned down to eliminate sharp points. Insulated cup-head pins can be used at the same spacing requirements of the insulation pins.

NOTE: Support hanger systems do not need to be wrapped provided the hanger rods are at least a minimum of 3/8 in. (9,53 mm) diameter and spaced a maximum of 60 in. (152 cm) on center along the length of the duct. Use a minimum 2 in. x 2 in. x 1/4 in. (50 mm x 50 mm x 6,35 mm) steel angle steel support channel or SMACNA equivalent support system.

Access Door Installation (See Figure 2)
Four galvanized steel threaded rods, 1/4 in. diameter (6,35 mm) by 4-1/2 in. to 5 in. long (114 mm to 127 mm) are welded to the duct at the corners of the door opening. Four steel tubes, each 3 in. (76 mm) long, are placed over the rods to act as protection for the 3M Fire Barrier Duct Wrap 15A when fastening the door. Four insulation pins are welded to the door panel for installation of the blanket. One layer of 3M Fire Barrier Duct Wrap 15A is cut approximately the same size as the access panel and impaled over the insulation pins on the panel. *It is essential that this layer fit tightly against the wrap surrounding the access door opening with no through openings.* A second layer of 3M Fire Barrier Duct Wrap 15A is cut so as to overlap the first layer by a minimum of 1 in. (25,4 mm). The second layer is impaled over the pins and both layers are locked in place with galvanized speed clips. Pins that extend beyond the outer layer of 3M Fire Barrier Duct Wrap 15A shall be turned down to avoid sharp points on the door.

The insulated door panel is placed over the threaded rods and held in place with washers and wing nuts. The details are shown in Figure 2.

Penetrations (See Figure 3)
When the duct penetrates a fire rated wall, ceiling or floor, an approved firestop system must be employed. Figure 3 illustrates a typical condition.

To firestop the wrapped duct, follow the installation parameters detailed in the following Omega Point Laboratories, Inc. systems:
FS 557 W, FS 558 F, FS 559 W, FS 560 F, FS 561 F, FS 562 W, FS 563 W, FS 578 F, FS 579 W.

Other Applications
More details on the installation of the product can be found in the 3M Product Data and Installation Instruction Manual (98-0400-5054-8).

7. Maintenance
No maintenance is required when installed in accordance with the 3M Installation Instructions. Once installed, if any section of the 3M Fire Barrier Duct Wrap 15A is damaged so that the blanket is damaged,

Figure 1
3M Fire Barrier Duct Wrap 15A Commercial Kitchen Grease Duct Systems
1 or 2 Hour Shaft Alternative Zero Clearance to Combustibles
Telescoping Wrap Technique With Banding For Ducts 24 Inches (60,9 cm) or Less

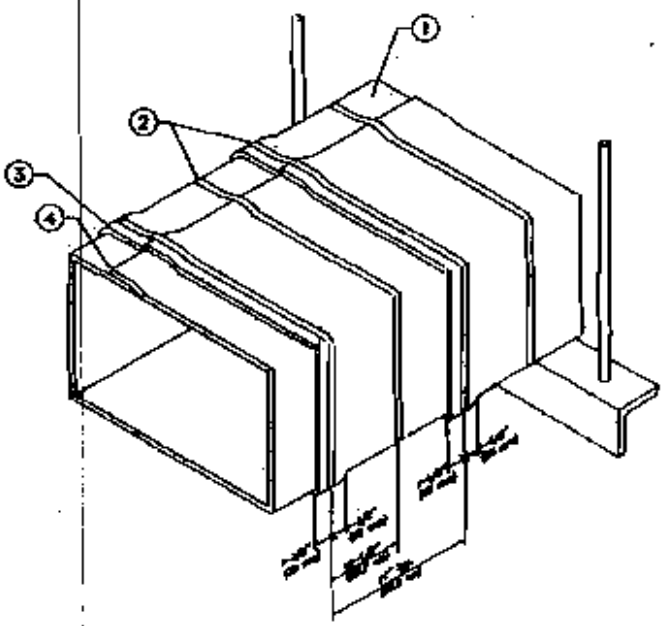

Telescoping Overlap Wrap Option
Cross Sectional View

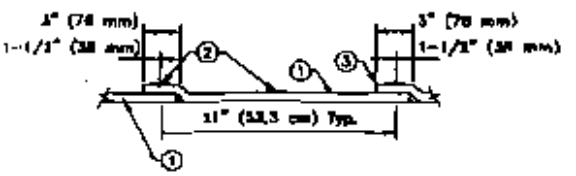

Checkerboard Overlap Wrap Option
Cross Sectional View

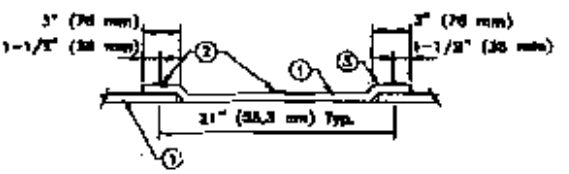

Butt Joint With Collar Option
Cross Sectional View

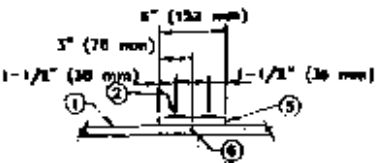

1.	One Layer 3M Fire Barrier Duct Wrap 15A
2.	Steel Banding 1/2 in. (13 mm) Wide Min. Typical
3.	3 in. (76 mm) Min. Longitudinal Overlap
4.	3 in. (76 mm) Min. Perimeter Overlap

System Integrity is limited by quality of installation.

the following procedures will apply:

- The damaged section should be removed by cutting the steel banding or removing the clips holding it in place.
- A new section of the same dimension should be cut from a roll of 3M Fire Barrier Duct Wrap 15A, either 24 in. (60.9 cm) or 48 in. (121 cm) wide.
- The new section should be placed and fitted ensuring the same overlap that existed previously.
- The steel banding should be placed around the material and tensioned so as to sufficiently hold the 3M Fire Barrier Duct Wrap 15A in place.
- If the blanket has not been damaged but the foil has ripped, seal the rips with aluminum foil tape.

8. Purchase Information

3M Fire Barrier products are available through a network of nationwide distributors. For information on where to buy, go to www.3m.com/firestop.

9. Safe Handling Information

Consult Material Safety Data Sheet prior to handling and disposing of 3M Fire Barrier Duct Wrap 15A.

Figure 2
3M Fire Barrier Duct Wrap 15A
Commercial Kitchen Grease Duct Systems
1 or 2 Hour Access Door System

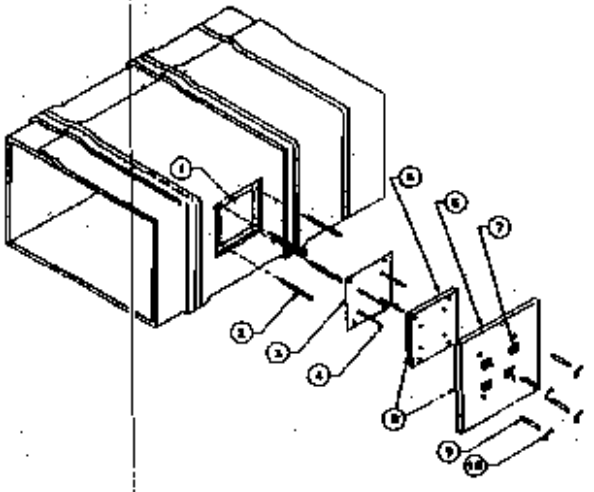

1.	Access Hole
2.	1/4 in. (6 mm) Dia. All Threaded Rods
3.	Access Cover – 16 Gauge
4.	Installation Pins – Welded
5.	First Layer 3M Fire Barrier Duct Wrap 15A Cut Same Size As Cover
6.	Second Layer 3M Fire Barrier Duct Wrap 15A with 1 in. (25mm) Overlap On All Sides
7.	Speed Clips
8.	Aluminum Tape Covering All Exposed Edges
9.	Spool Pieces For Threaded Rods
10.	1/4 in. (6mm) Diameter Wing Nuts

System Integrity is limited by quality of installation.

Figure 3
3M Fire Barrier Duct Wrap 15A
Commercial Kitchen Grease Duct Systems
1 or 2 Hour Through Penetration Systems
4-1/2 Inch (11,4 cm) Concrete Floor or Wall

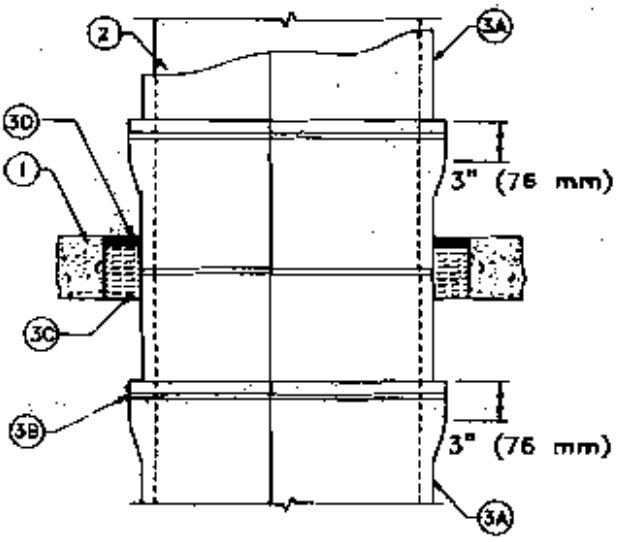

1.	Floor/Ceiling or Wall Assembly
2.	Duct
3A.	One Layer 3M Fire Barrier Duct Wrap 15A
3B.	Banding or Pinning
3C.	Packing Material
3D.	3M Fire Barrier 1000 N/S, 1003 SA, or 2000+ Silicone Sealant For Wall Assembly Apply Sealant To Both Sides of Wall

System Integrity is limited by quality of installation.

Warranty and Limited Remedy. This product will be free from defects in material and manufacture for a period of ninety (90) days from date of purchase. 3M MAKES NO OTHER WARRANTIES INCLUDING, BUT NOT LIMITED TO, ANY IMPLIED WARRANTY OR MERCHANTABILITY OR FITNESS FOR A PARTICULAR PURPOSE. User is responsible for determining whether the 3M product is fit for a particular purpose and suitable for user's method of application. If the 3M product is proved to be defective within the warranty period stated above, your exclusive remedy and 3M's sole obligation shall be, at 3M's option, to replace or repair the 3M product or refund the purchase price of the product.

Limitation of Liability. Except where prohibited by law, 3M will not be liable for any loss or damages arising from the use of this 3M product, whether direct, indirect, special, incidental or consequential, regardless of the legal theory asserted, including warranty, contract, negligence or strict liability.

3M

Building Safety Solutions Department

3M Center 223-2S-24
St. Paul, MN 55144-1000
Phone 800-328-1687
Fax 888-362-2737
www.3m.com/firestop

Printed in U.S.A.

Bulgar 0000724

© 3M 2001 98-0400-5008-2 (Mar 2006)