NOTES:

1. ANY ALTERNATE TRENCHING METHODS SHALL BE APPROVED IN ADVANCE BY THE CITY.
2. ALL CONSTRUCTION METHODS SHALL CONFORM TO THE CITY OF PORTLAND TECHNICAL STANDARDS FIGURE II–2.
3. BRACING & SHEETING OR OTHER TRENCH PROTECTION TO BE PROVIDED TO MEET APPLICABLE STATE AND O.S.H.A SAFETY STANDARDS. ALL SUCH TRENCH PROTECTION SHALL BE THE RESPONSIBILITY OF THE CONTRACTOR.
4. WHERE APPLICABLE, PERFORATIONS IN STORM DRAIN (PERF.SD) SHALL BE ORIENTED UP.
5. ALL STORM DRAINS SHALL BE PVC SDR 35 MIN PS–46 RATING OR OR IN ACCORDANCE WITH CITY OF PORTLAND TECHNICAL MANUAL , SECTION 2 – SANITARY SEWER AND STORM DRAIN – PART 2.5.2
6. IN PAVED AREAS, DEPTHS OF GRAVEL AND HOT MIX ASPHALT PAVEMENT SHALL MATCH THE GREATER OF EXISTING CONDITIONS OR THE REQUIREMENTS FOR THE CORRESPONDING STREET CLASSIFICATION.
7. THIS DETAIL SHALL BE APPLIED ONLY TO PIPE TRENCHES WITHIN OF THE CITY OF PORTLAND ROW.STORM DRAIN COVER BETWEEN 2' AND 3' SHALL INCLUDE 4" OF RIGID INSULATION. COVER BETWEEN 3' AND 4' SHALL INCLUDE 2' RIGID INSULATION. OTHER UTILITIES: ADD 2" OF RIGID INSULATION FOR EACH FOOT ABOVE MINIMUM DEPTH.

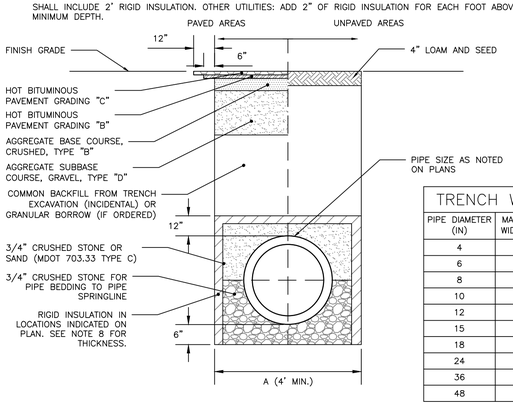

TRENCH WIDTH	
PIPE DIAMETER (IN)	MAX. TRENCH WIDTH, A (FT)
4	4
6	4
8	4
10	4
12	5
15	5
18	5
24	6
36	6
48	7

CITY OF PORTLAND TYPICAL PIPE TRENCH DETAIL
NOT TO SCALE

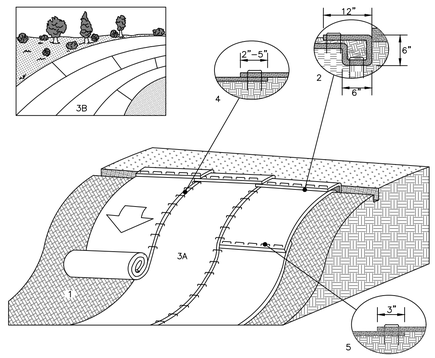

SLOPE INSTALLATION DETAIL

1. PREPARE SOIL BEFORE INSTALLING ROLLED EROSION CONTROL PRODUCTS (ECB), INCLUDING ANY NECESSARY APPLICATION OF LIME, FERTILIZER, AND SEED
2. BEGIN AT THE TOP OF THE SLOPE BY ANCHORING THE ECB IN A 6" DEEP X 6" WIDE TRENCH WITH APPROXIMATELY 12" OF ECB EXTENDED BEYOND THE UP–SLOPE PORTION OF THE TRENCH. ANCHOR THE ECB WITH A ROW OF STAPLES/STAKES APPROXIMATELY 12" APART IN THE BOTTOM OF THE TRENCH. BACKFILL AND COMPACT THE TRENCH AFTER STAPLING. APPLY SEED TO THE COMPACTED SOIL AND FOLD THE REMAINING 12" PORTION OF ECB BACK OVER THE SEED AND COMPACTED SOIL. SECURE ECB OVER COMPACTED SOIL WITH A ROW OF STAPLES/STAKES SPACED APPROXIMATELY 12" APART ACROSS THE WIDTH OF THE ECB.
3. ROLL THE ECB (A) DOWN OR (B) HORIZONTALLY ACROSS THE SLOPE. ECB WILL UNROLL WITH APPROPRIATE SIDE AGAINST THE SOIL SURFACE. ALL ECB MUST BE SECURELY FASTENED TO SOIL SURFACE BY PLACING STAPLES/STAKES IN APPROPRIATE LOCATIONS AS SHOWN IN THE STAPLE PATTERN GUIDE.
4. THE EDGES OF PARALLEL ECB MUST BE STAPLED WITH APPROXIMATELY 2" – 5" OVERLAP DEPENDING ON THE ECB TYPE.
5. CONSECUTIVE ECB SPLICED DOWN THE SLOPE MUST BE END OVER END (SHINGLE STYLE) WITH AN APPROXIMATE 3" OVERLAP. STAPLE THROUGH OVERLAPPED AREA, APPROXIMATELY 12" APART ACROSS ENTIRE ECB WIDTH.

*NOTE:
IN LOOSE SOIL CONDITIONS, THE USE OF STAPLE OR STAKE LENGTHS GREATER THAN 6" MAY BE NECESSARY TO PROPERLY SECURE THE ECB.

EROSION CONTROL BLANKET SLOPE INSTALLATION
NOT TO SCALE

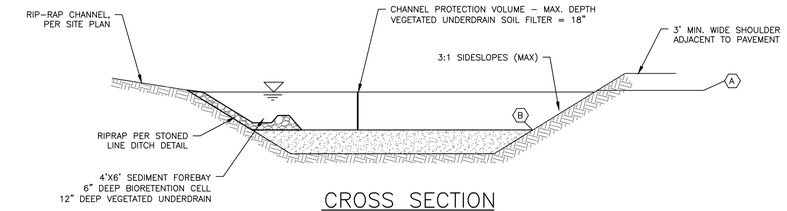

CROSS SECTION

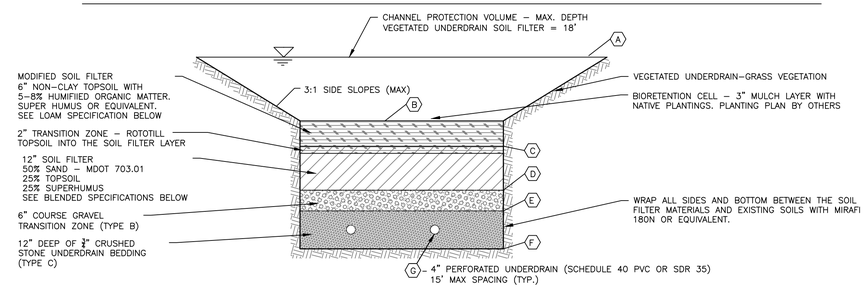

SOIL FILTER DETAIL

NOTES:

1. THE SIDESLOPES SHALL BE STABILIZED WITH A MIN. OF 4" LOAM, EROSION CONTROL BLANKETS SC150BN BY NORTH AMERICAN GREEN OR APPROVED EQUAL AND A CONSERVATION SEED MIX. THE BOTTOM OF THE VEGETATED UNDERDRAIN SHALL BE STABILIZED WITH EROSION CONTROL BLANKETS SC150BN BY NORTH AMERICAN GREEN OR APPROVED EQUAL AND A CONSERVATION SEED MIX
2. LIGHT COMPACTION SOIL FILTER AND PIPE BEDDING MATERIAL. (90 TO 92% STANDARD PROCTOR). TESTING SHALL BE PERFORMED BY A QUALIFIED MATERIAL TESTING FIRM.
3. THE SOIL FILTER MEDIA SHALL NOT BE CONSTRUCTED UNTIL THE AREA DRAINING TO THE BASIN HAS BEEN PERMANENTLY STABILIZED.
4. THE SEDIMENT FOREBAY SHALL BE CONSTRUCTED PRIOR TO CONSTRUCTION OF THE SOIL FILTER AND INSPECTED AND MAINTAINED DURING CONSTRUCTION. MAINTENANCE SHALL INCLUDE REMOVAL OF ANY ACCUMULATED SEDIMENT.
5. MINIMUM UNDERDRAIN SLOPE 0.0025 TOWARDS THE EXISTING CATCH BASIN.
6. TESTING: SIEVE ANALYSIS INCLUDING HYDROMETER TESTING FOR CLAY CONTENT FOR EACH LAYER SHALL BE PERFORMED BY A QUALIFIED SOIL TESTING LABORATORY AND SUBMITTED TO THE PROJECT ENGINEER FOR APPROVAL 2 WEEKS PRIOR TO CONSTRUCTION. ALL TESTING AND SUBMITTALS SHALL BE IN ACCORDANCE WITH THE MAINE DEP – TECHNICAL DESIGN MANUAL SECTION 7.2.5 TESTING AND SUBMITTALS.

SCHEDULE	
ITEM	VUSF
(A) CB RIM	95.5'
(B) TOP OF MOD. SOIL FILTER	94'
(C) TOP OF SOIL FILTER	93.5'
(D) TOP OF GRAVEL	92.5'
(E) TOP OF STONE	92'
(F) BOTTOM OF STONE	91'
(G) UNDERDRAIN INVERT	91.33'

6" SOIL FILTER BED – LOAM TOPSOIL SPECIFICATION	
SIEVE SIZE	% PASSING BY WEIGHT
#4	75–95
#10	60–90
#40	35–85
#200	20–70
1. CLAY FRACTION <2% PASSING THE #200 SIEVE. 2. LOAM SHALL BE LOOSE AND FRIABLE AND SHALL BE FREE FROM ADMIXTURE OF SUBSOIL, REFUSE, LARGE STONES, CLODS OR ROOTS OR RHIZOMES OR "WITCH GRASS" OR OTHER UNDESIRABLE GRASSES.	

SOIL FILTER BED – SUPERHUMUS OR EQUIV. SPECIFICATION	
SIEVE SIZE	% PASSING BY WEIGHT
1"	100
#200	0–5
MINIMAL CLAY CONTENT, NO MORE THAN 3–5% PASSING #200 SIEVE	

12" SOIL FILTER BED – BLENDED SAND, LOAM, SUPERHUMUS SIEVE ANALYSIS	
SIEVE SIZE	% PASSING BY WEIGHT
#10	85–100
#20	70–100
#60	15–40
#200	8–15
1. CLAY FRACTION <2% PASSING THE #200 SIEVE. 2. SUPERHUMUS OR EQUIVALENT	

SOIL FILTER BED – TRANSITION ZONE (TYPE B)	
SIEVE SIZE	% PASSING BY WEIGHT
1"	90–100
1/2"	75–100
#4	50–100
#20	15–80
#50	0–15
#200	0–5

SOIL FILTER BED – UNDERDRAIN BEDDING (TYPE C)	
SIEVE SIZE	% PASSING BY WEIGHT
1"	100
3/4"	90–100
3/8"	0–75
#4	0–25
#10	0–5

VEGETATED UNDERDRAIN SOIL FILTER DETAIL
NOT TO SCALE

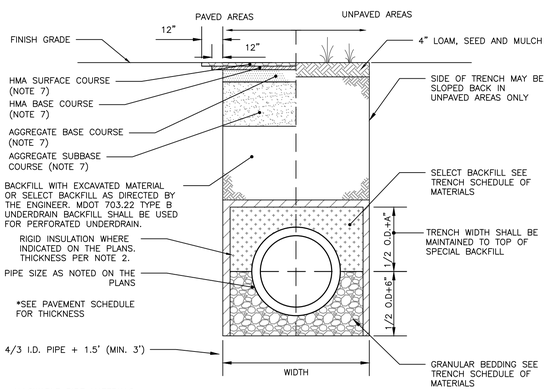

ALLOWABLE PIPE MATERIALS:
- REINFORCED CONCRETE PIPE (RCP) MIN. STRENGTH OF CLASS III
- PVC RING TYPE SEWER (SDR 35) OR EQUIVALENT, MIN PS–46 RATING
- PVC RING TYPE SEWER PIPE MEETING ASTM F 789
- DUCTILE IRON PIPE (DIP)
- ADS N–12 HP TRIPLE–WALL MIN PS–46 RATING
- ADS SANITITE HP MIN. PS–46

SCHEDULE OF MATERIALS		
TYPE OF PIPE	GRANULAR BEDDING	SELECT BACKFILL
CMP DUCTILE IRON RCP	MDOT 703.22 TYPE B UD BACKFILL	MDOT 703.22 TYPE B UD BACKFILL
PVC/HDPE	MDOT 703.22 TYPE C 3/4" CRUSHED STONE	MDOT 703.22 TYPE B UD BACKFILL
CMP	MDOT 703.22 TYPE C 3/4" CRUSHED STONE	MDOT 703.22 TYPE C 3/4" CRUSHED STONE

NOTES:

1. BRACING AND SHEETING OR OTHER TRENCH PROTECTION TO BE PROVIDED TO MEET APPLICABLE STATE AND O.S.H.A. SAFETY STANDARDS. ALL SUCH TRENCH PROTECTION TO BE THE RESPONSIBILITY OF THE CONTRACTOR.
2. STORM DRAIN COVER BETWEEN 2' AND 3' SHALL INCLUDE 4" OF RIGID INSULATION. COVER BETWEEN 3' AND 4' SHALL INCLUDE 2' RIGID INSULATION. OTHER UTILITIES: ADD 2" OF RIGID INSULATION FOR EACH FOOT ABOVE MINIMUM DEPTH.
3. INSTALL WARNING TAPE DIRECTLY ABOVE UTILITIES AT THE TOP OF SUBGRADE.
4. MINIMUM COVER
   4.1. 2'–0" – STORM DRAIN
   4.2. 5'–0" – SEWER
5. NO TREES SHALL BE PLANTED WITHIN 5' OF A SEWER PIPE OR SERVICE
6. THIS DETAIL SHALL BE APPLIED ONLY TO DRAINAGE PIPE TRENCHES OUTSIDE OF THE CITY OF PORTLAND ROW.
7. THICKNESS AS NOTED BY SURFACE DETAILS

INTERNAL STORM DRAIN AND SEWER TYPICAL TRENCH SECTION
NOT TO SCALE

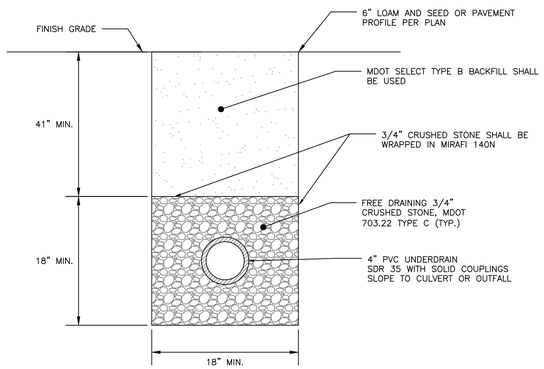

NOTES:

1. MINIMUM UNDERDRAIN SLOPE 0.0025 (0.25%)
2. PERFORATIONS IN UNDERDRAIN PIPE SHALL BE ORIENTED DOWN.

UNDERDRAIN DETAIL
NOT TO SCALE

NOTES:

1. ALL CONCRETE TO HAVE A MIN. OF 4,000 PSI COMPRESSIVE STRENGTH AT 28 DAYS.
2. DESIGN LOAD FOR H–20 WHEEL LOAD.
3. CATCH BASIN TO CONFORM TO ASTM–C478 SPECIFICATIONS.
4. REINFORCE TO 0.12 IN SQ./LF.
5. JOINTS SEALED WITH BUTYL RUBBER.
6. POLYPROPYLENE STEPS 12" O.C.
7. CASCO TRAPS SHALL BE PROVIDED ON ALL PIPES 12" OR LESS.
8. ALL PIPES TO HAVE A WATERTIGHT SEAL.

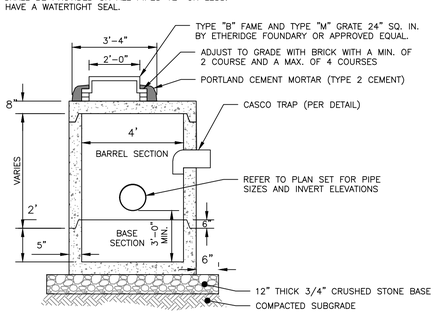

4'–0" PRECAST CATCH BASIN WITH FLATTOP
NOT TO SCALE

NOTES:

1. INSTALL "CASCO TRAP" AS MANUFACTURED BY THE ETHERIDGE FOUNDRY, OR APPROVED EQUIVALENT AS SUPPLIED BY THE LEBARON FOUNDRY, MODEL #L, 202 "STANDARD CATCH BASIN TRAP". INSTALL TRAP IN ALL CATCH BASINS WITH A 12" OR 15" OUTLET PIPE.
2. THE CASCO TRAP IS AN ETHERIDGE STYLE DESIGNED TO ELIMINATE CEMENTING OF THE TRAP.
3. TO INSTALL, THE CASCO TRAP IS INSERTED INTO THE PIPE WITH THE HOOD DOWN.

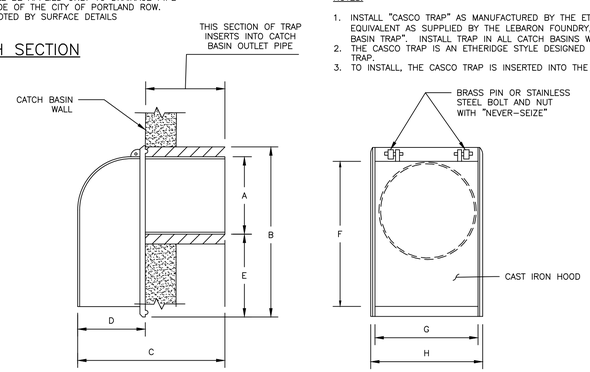

SIZE	A	B	C	D	E	F	G	H
6"	5 1/2	13 3/8	13 3/4	5 3/8	5 7/8	11 5/8	6 1/2	7 1/4
8"	7 1/2	15	15 3/8	5 1/2	5 3/8	13 3/4	8 3/4	9 3/8
10"	9 1/2	16	16 1/4	6	4 1/2	14 1/8	11 1/2	12 3/8
12"	11 1/2	17	22	8	3 1/2	17	12 1/2	13 3/8

(AS MANUFACTURED BY THE ETHERIDGE FOUNDRY IN PORTLAND, ME)

CASCO TRAP DETAIL
NOT TO SCALE

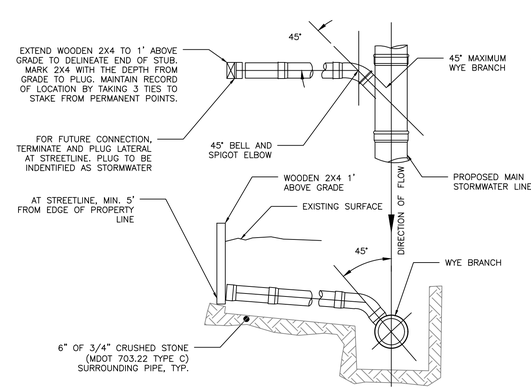

NOTES:

1. LOCATION WITH WARNING TAPE SHALL BE INSTALLED OVER CENTERLINE OF PIPE AT A MAXIMUM OF 24 INCHES BELOW FINISH GRADE.
2. SITE CONTRACTOR TO REFER TO THE LAST REVISED GRADING, DRAINAGE, & EROSION CONTROL PLAN FOR STORMWATER LATERAL CONNECTION AND LOCATION INFORMATION.
3. CONNECTION OF PROPOSED STORMWATER LATERAL TO THE SITE STORMWATER SYSTEM SHALL INCORPORATE USE OF SIMILAR PIPE MATERIALS. IN THE CASE OF DISSIMILAR PIPES BEING USED, A FERNCO FLEXIBLE COUPLING SHALL BE USED.

STORMWATER TEE/WYE CONNECTION DETAIL
NOT TO SCALE

PERMITTING
NOT ISSUED FOR
CONSTRUCTION

ISSUED FOR	BY	DATE
LEVEL II SITE PLAN	WHS	3/1/19

DRAWING NAME: DRAINAGE DETAILS

PROJECT NAME: PMA VISITOR PARKING LOT PROJECT

CLIENT: PORTLAND MUSEUM OF ART
7 CONGRESS SQUARE PORTLAND, MAINE 04101

ACORN ENGINEERING, INC.
65 HANOVER STREET, PORTLAND, MAINE 04101
ACORN ENGINEERING, INC.
(207) 775–2655

THIS PLAN SHALL NOT BE MODIFIED WITHOUT WRITTEN PERMISSION FROM ACORN ENGINEERING, INC. ANY MODIFICATION, ALTERATION OR OTHERWISE, SHALL BE AT THE USER'S SOLE RISK AND WITHOUT LIABILITY TO ACORN ENGINEERING, INC.

FILE:	1111_CIVIL
JN:	1111
SCALE:	AS NOTED
DESIGNED BY:	FRT
DRAWN BY:	FRT
CHECKED BY:	WHS

STATE OF MAINE WILLIAM H. SAWYER 2121 PROFESSIONAL ENGINEER

DRAWING NO.
C-42