DESIGN NOTES

1. THIS STRUCTURE IS DESIGNED TO COMPLY WITH THE 2009 EDITION OF THE INTERNATIONAL BUILDING CODE.
2. SEISMIC: DESIGN FOR EARTHQUAKE LOAD IS IN ACCORDANCE WITH ASCE7–05, "MINIMUM DESIGN LOADS FOR BUILDINGS AND OTHER STRUCTURES."
   - A. SEISMIC IMPORTANCE FACTOR = 1.0
   - B. SPECTRAL RESPONSE ACCELERATION Ss = 0.319
   - C. SPECTRAL RESPONSE ACCELERATION S1 = 0.077
   - D. SITE CLASS D (ASSUMED)
   - E. SPECTRAL RESPONSE COEFFICIENT SDS = 0.328
   - F. SPECTRAL RESPONSE COEFFICIENT SD1 = 0.124
   - G. SEISMIC DESIGN CATEGORY B
   - H. NON–STRUCTURAL COMPONENT: APPENDAGES AND ORNAMENTATIONS
   - I. COMPONENT AMPLIFICATION FACTOR, ap = 2.5
   - J. COMPONENT RESPONSE MODIFICATION FACTOR, Rp = 2.5
   - K. COMPONENT INSTALLED WEIGHT = 3,500#
3. FOUNDATION BEARING PRESSURES: FOOTINGS HAVE BEEN PROPORTIONED USING A PRESUMPTIVE BEARING PRESSURE OF 2000 PSF PER IBC TABLE 1804.2

CONCRETE NOTES:

1. ALL CONCRETE WORK SHALL CONFORM TO ACI 318 AND 301.
2. CONCRETE COMPRESSIVE STRENGTH AT 28 DAYS SHALL BE 3000 PSI.
3. CONCRETE SHALL NOT BE PLACED IN WATER OR ON FROZEN GROUND.
4. REINFORCING BARS SHALL CONFORM TO ASTM A–615 GRADE 60 DEFORMED BARS AND SHALL BE DETAILED, FABRICATED, AND PLACED IN ACCORDANCE WITH ACI 315–LATEST EDITION.
5. REINFORCEMENT SHALL HAVE THE FOLLOWING COVER:
   - A. CAST AGAINST EARTH: 3"
   - B. EXPOSED TO EARTH AND WEATHER: 1–1/2"
6. SPLICES OF REINFORCING BARS SHALL BE IN ACCORDANCE WITH ACI 318, UNLESS OTHERWISE NOTED ON DRAWINGS.
7. COMPLETE SHOP DRAWINGS OF ALL REINFORCING STEEL SHALL BE SUBMITTED TO THE ENGINEER FOR REVIEW PRIOR TO COMMENCEMENT OF THAT PORTION OF THE WORK.

STRUCTURAL STEEL NOTES:

1. STRUCTURAL STEEL FABRICATION, ERECTION, AND CONNECTION DESIGN SHALL CONFORM TO AISC "STEEL CONSTRUCTION MANUAL" – THIRTEENTH EDITION.
2. STRUCTURAL STEEL FOR PLATES, ANGLES, AND CHANNELS SHALL CONFORM TO ASTM A36.
3. ALL WELDING SHALL CONFORM TO AWS D1.1–LATEST EDITION. ELECTRODES SHALL BE E70XX.
4. SHOP DRAWINGS DETAILING FABRICATION AND ERECTION OF EACH METAL FABRICATION INDICATED SHALL BE SUBMITTED TO THE PROJECT ENGINEER FOR REVIEW PRIOR TO FABRICATION AND CONSTRUCTION.

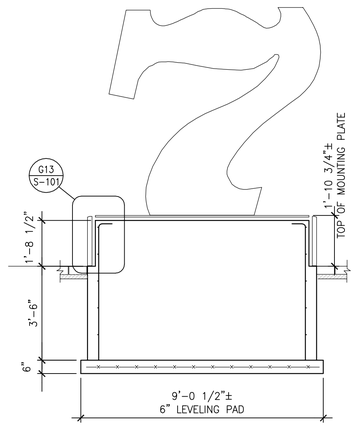

G5 SECTION
3/8"=1'–0"

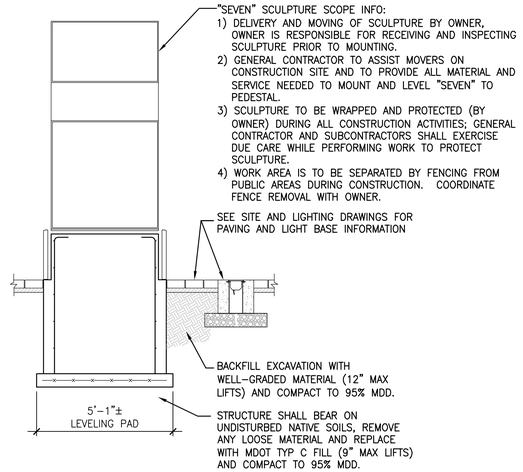

G8 SECTION
3/8"=1'–0"

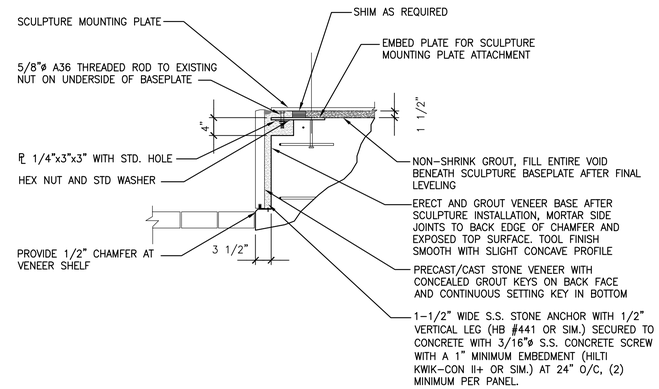

G13 SECTION @ CORNER CONNECTION PLATE
3/4"=1'–0"

NOTES:
1. COORDINATE WORK WITH OWNER PRIOR TO COMMENCEMENT OF OPERATIONS. OWNER TO PROTECT/REMOVE OF ANY ART NECESSARY PRIOR TO START OF DRILLING / EXCAVATION.
2. CORE DRILL EXISTING 16" FOUNDATION FOR NEW CONDUIT.
3. PATCH AND WATERPROOF ENTRY POINT AND TEST PRIOR TO BACKFILLING EXCAVATION.
4. LOCATION OF HOLE IS TO BE POSITIONED TO ENTER THE BUILDING IN LINE WITH EXISTING AUDITORIUM PROJECTION BOOTH IN LOWER LOBBY AND ABOVE EXISTING HARD CEILING.
5. PROVIDE OPENINGS THROUGH NON–BEARING CMU PARTITIONS AS REQUIRED TO RUN CONDUIT BETWEEN PROJECTION BOOTH, STORE ROOM AND CORED HOLE IN FOUNDATION. PATCH AND SEAL OPENINGS AROUND CONDUIT TO COMPLETE WORK. ALL WORK TO BE CONCEALED ABOVE CEILING AND ACCESSED THROUGH EXISTING ACCESS PANELS.

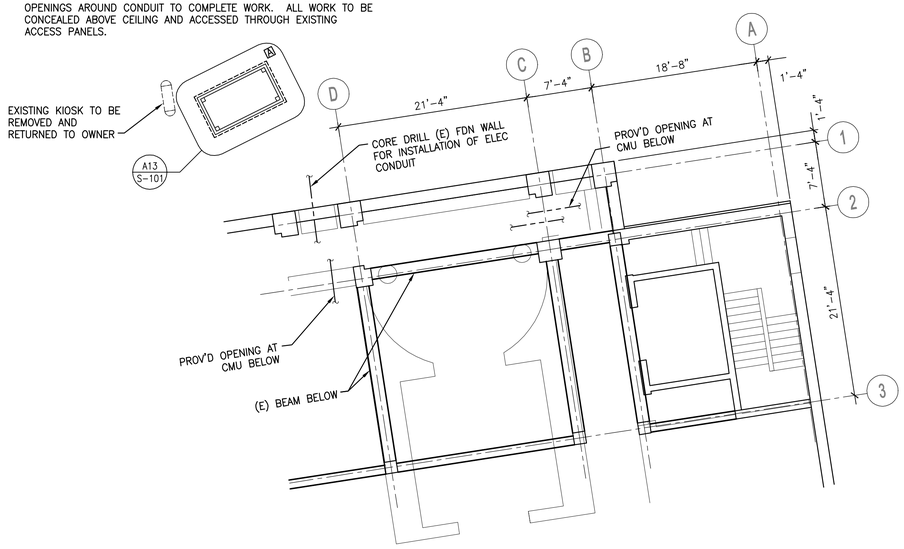

A1 PART PLAN AT PAYSON BUILDING ENTRANCE
1/8"=1'–0"

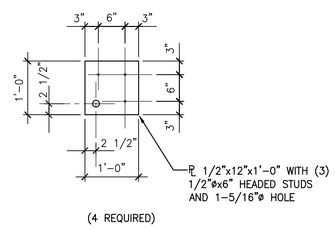

A8 EMBEDDED CONNECTION PLATE DETAIL
3/4"=1'–0"

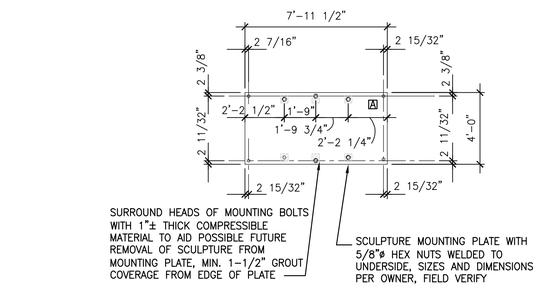

D13 SCULPTURE MOUNTING PLATE LAYOUT
1/8"=1'–0"

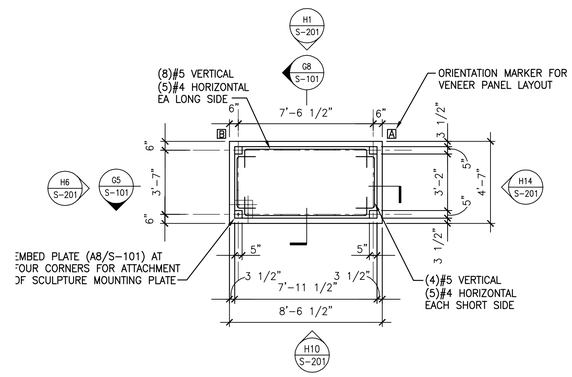

A13 FOUNDATION PLAN
1/4"=1'–0"

144 Fore Street, PO Box 618
Portland, Maine 04104
ARCHITECTURE
ENGINEERING
PLANNING
INTERIORS
ENERGY
SMRT

Reviewed for Code Compliance
Inspections Division
Approved with Conditions
Date: 10/17/14

STATE OF MAINE
ANDREW D. BRADLEY
No. 9840
LICENSED
PROFESSIONAL ENGINEER
10-8-14

PROJECT NORTH:
PROJECT NORTH
MAG. NORTH

PORTLAND MUSEUM OF ART
ROBERT INDIANA "SEVEN" PEDESTAL
PORTLAND, MAINE

ISSUED FOR CONSTRUCTION
10-08-14

CURRENT ISSUE STATUS:

REV	DESCRIPTION	DATE
0	ISSUED FOR CONSTRUCTION	10-08-14

GRAPHIC SCALE: 0" 1"

SCALE:	AS NOTED
PROJECT MANAGER:	ADB
JC/DRAWN BY:	ADB/ SJF
A/E OF RECORD:	ADB
PROJECT NO:	14142
SMRT FILE:	S-101-14142
DATE:	

SHEET TITLE:
PEDESTAL PLAN AND DETAILS

SHEET No.
S-101

© COPYRIGHT 2014 SMRT INC.