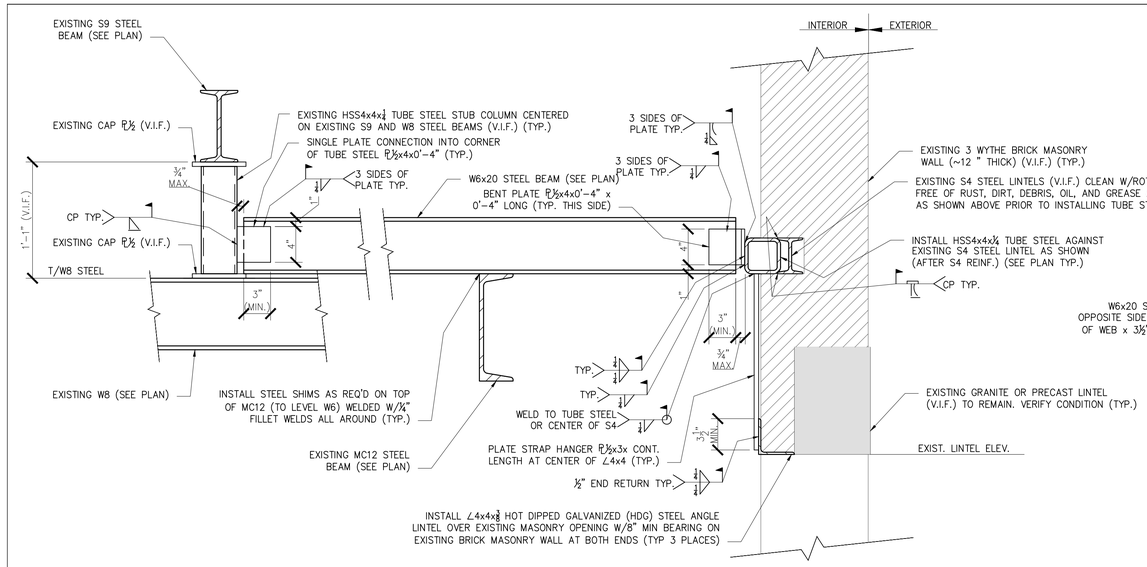

SECTION 1/S1

1 1/2" = 1'-0"

SEE SECTION 2/S2 FOR ADD'L INFO.

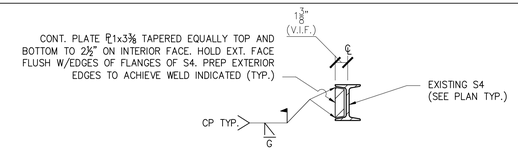

TYPICAL EXIST. S4 REINFORCEMENT ***

1 1/2" = 1'-0"

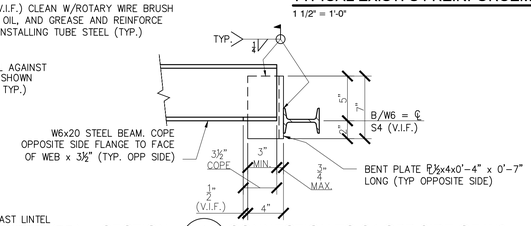

SECTION 1/S1 CONNECTION TO S4 OPP SIDE OF W6

1 1/2" = 1'-0"

NOTE: INSTALL BENT PLATE ON OPPOSITE SIDE (INDICATED ABOVE) PRIOR TO BENT PLATE ON SIDE OF SECTION CUT

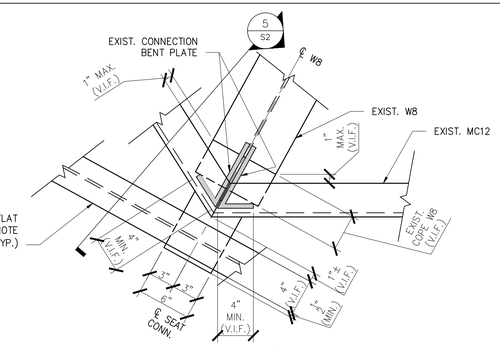

DETAIL A/S1

1 1/2" = 1'-0"

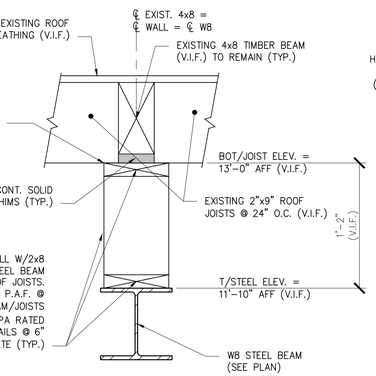

SECTION 4/S1

1 1/2" = 1'-0"

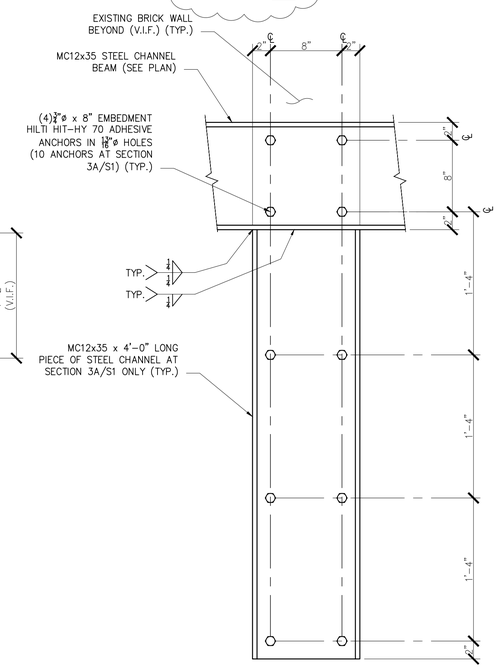

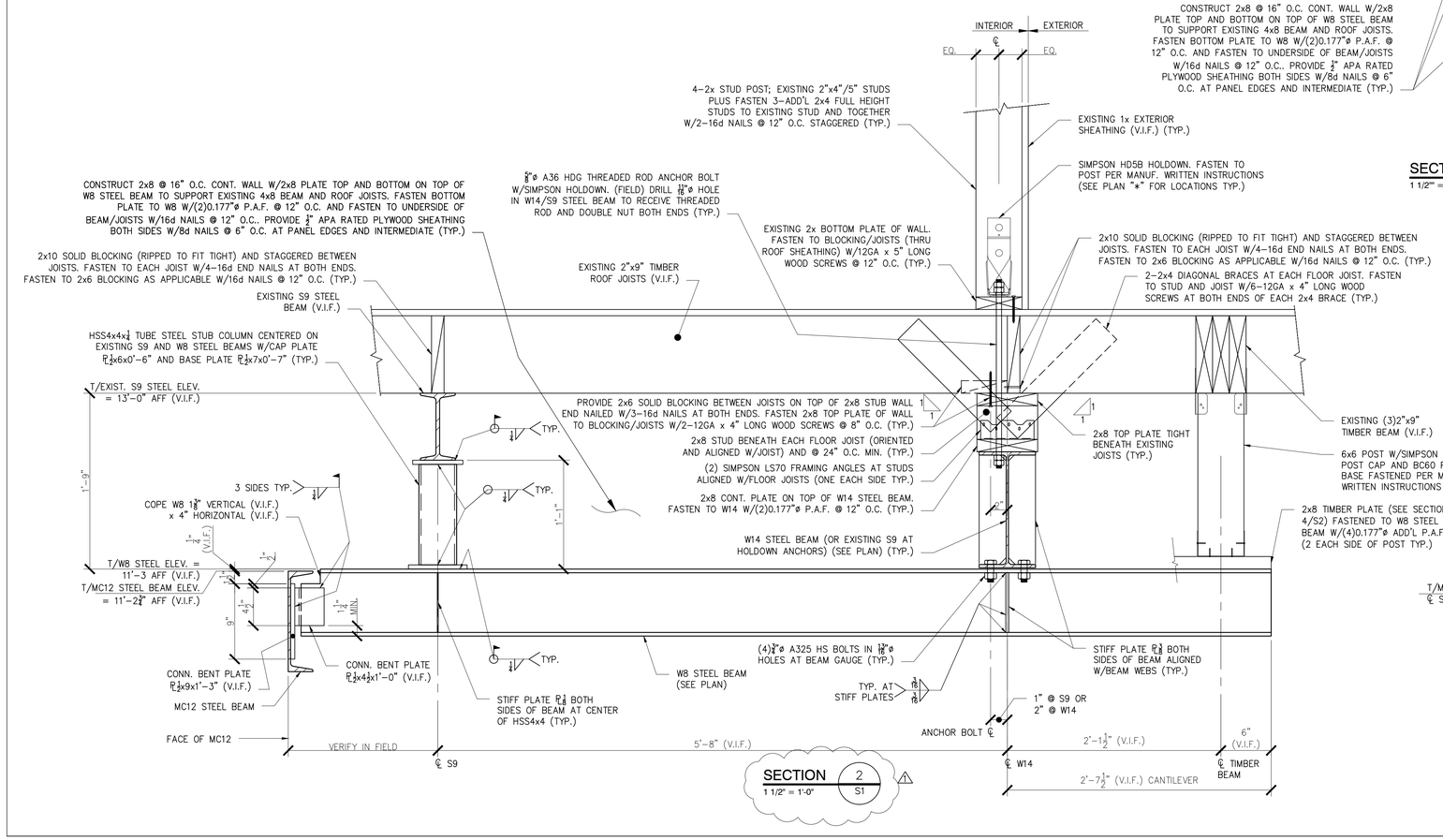

SECTION 2/S1

1 1/2" = 1'-0"

SECTION 3/S1 3A/S1

1 1/2" = 1'-0"

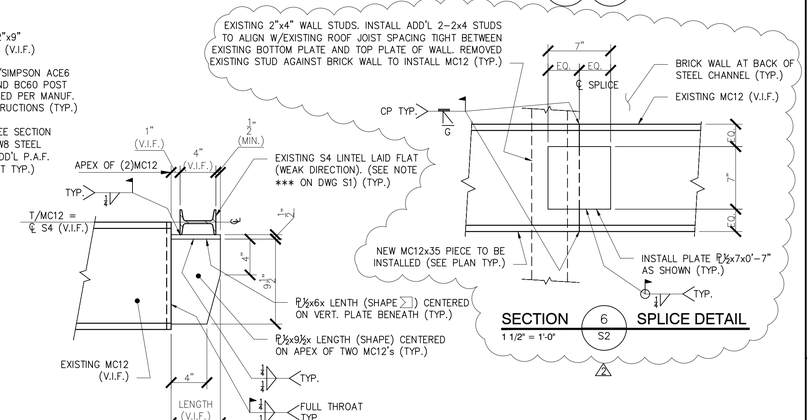

SECTION 5/S2

1 1/2" = 1'-0"

SECTION 6/S2 SPLICE DETAIL

1 1/2" = 1'-0"

THESE DRAWINGS HAVE BEEN DEVELOPED BY L&L STRUCTURAL ENGINEERING SERVICES, INC. FOR THE TITLED SET ONLY. THE DRAWINGS ARE THE SOLE PROPERTY OF L&L ENGINEERING SERVICES, INC. AND THEY SHALL NOT BE USED, LENT, COPIED OR ALTERED WITHOUT THE WRITTEN CONSENT OF L&L STRUCTURAL ENGINEERING SERVICES, INC.

L & L STRUCTURAL
ENGINEERING SERVICES, INC.
SIX Q STREET
SOUTH PORTLAND, MAINE 04106
PHONE: (207) 767-4830
FAX: (207) 799-5432
EMAIL: JLEASURE@L-L-ENG.COM

STATE OF MAINE
JOSEPH H. LEASURE
No. 6242
LICENSED
PROFESSIONAL ENGINEER

rev.	date	description	appr'd
A	07/07/17	FOR PERMIT ONLY	JHL
0	07/11/18	FOR CONSTRUCTION	JHL

designed by: JHL
drawn by: RJW, PJM
checked by: JHL
scale: AS NOTED
date: 07/07/2017
plot date: 07/11/2018
project #: 2016-211

BUILDING LOCATED AT
602 CONGRESS STREET
PORTLAND, MAINE

BUILDING REVIEW
FRAMING SECTIONS AND DETAILS

S2.0