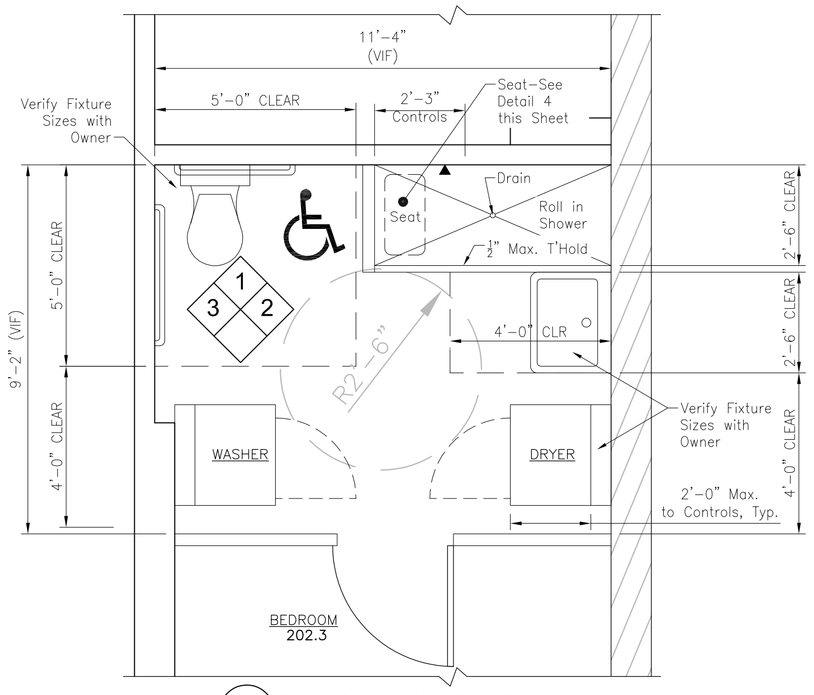

2 SUITE 202 ADA BATHROOM PLAN
3/8" = 1'-0"

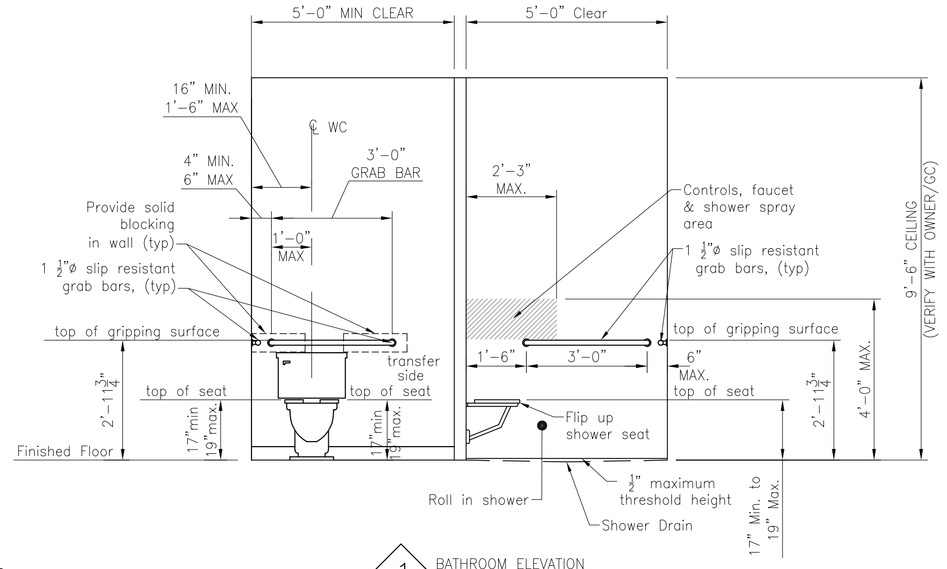

1 BATHROOM ELEVATION
3/8" = 1'-0"

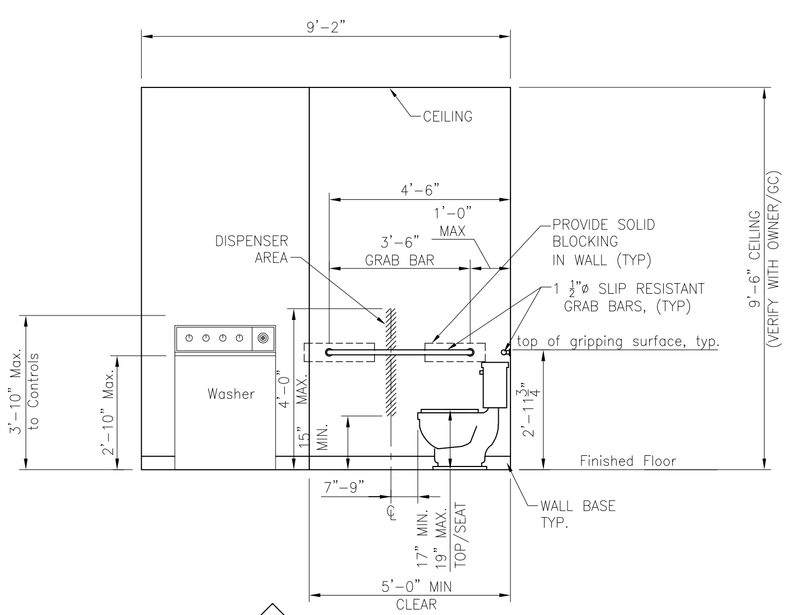

3 BATHROOM ELEVATION
3/8" = 1'-0"

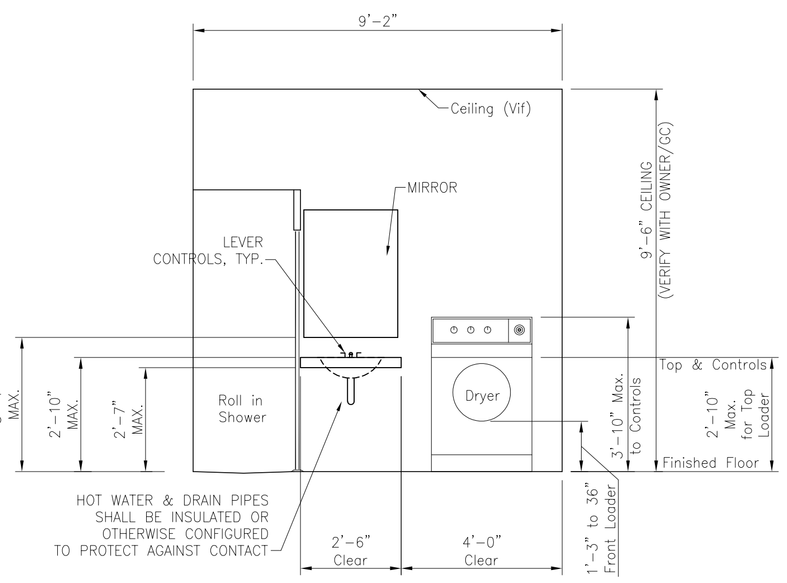

2 BATHROOM ELEVATION
3/8" = 1'-0"

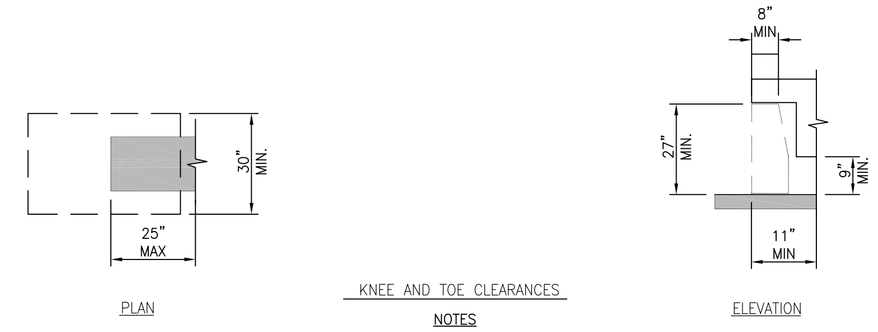

KNEE AND TOE CLEARANCES

NOTES

SPACE UNDER AN ELEMENT BETWEEN 9" AND 27" ABOVE FINISHED FLOOR SHALL BE CONSIDERED MINIMUM KNEE CLEARANCE. KNEE CLEARANCE SHALL EXTEND 25" MAXIMUM UNDER AN ELEMENT AT 9" ABOVE FINISHED FLOOR. KNEE CLEARANCE WIDTH SHALL BE 30" MINIMUM.
WHERE KNEE CLEARANCE IS REQUIRED UNDER AN ELEMENT AS A REQUIRED CLEAR FLOOR SPACE, THE KNEE CLEARANCE SHALL BE 11" DEEP MINIMUM AT 9" ABOVE FINISHED FLOOR AND 8" DEEP MINIMUM AT 27" ABOVE FINISHED FLOOR.

SPACE UNDER AN ELEMENT BETWEEN THE FINISHED FLOOR AND 9" ABOVE THE FINISHED FLOOR SHALL BE CONSIDERED TOE CLEARANCE. WHERE TOE CLEARANCE IS REQUIRED AS PART OF A CLEAR FLOOR SPACE, THE TOE CLEARANCE SHALL EXTEND 17" MINIMUM UNDER THE ELEMENT. TOE CLEARANCE WIDTH SHALL BE 30" MINIMUM.

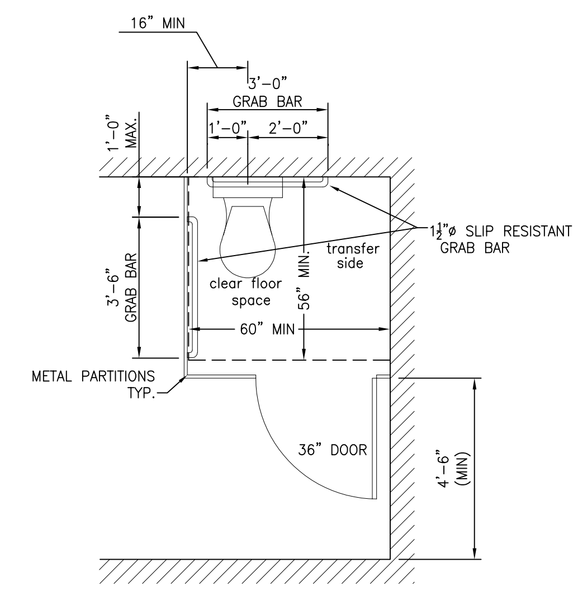

TYPICAL WATER CLOSET CLEARANCES

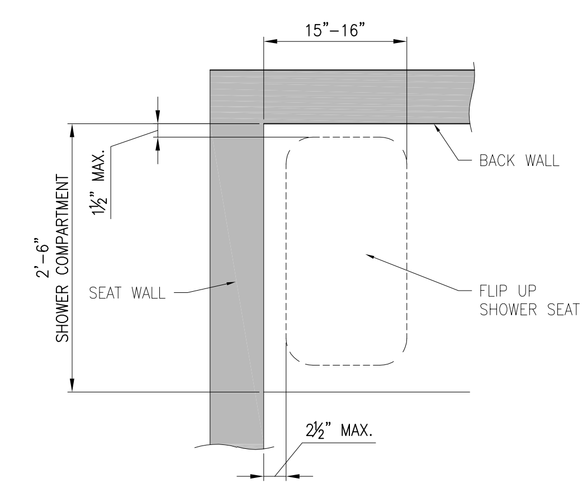

RECTANGULAR SHOWER SEAT 4
1" = 1'-0"

NOTES:

1. STRUCTURAL STRENGTH: ALLOWABLE STRESSES SHALL NOT BE EXCEEDED FOR MATERIAL USED WHEN A VERTICAL OR HORIZONTAL FORCE OF 250 LBS IS APPLIED AT ANY POINT ON THE SEAT, FASTENER, MOUNTING DEVICE, OR SUPPORTING STRUCTURE.

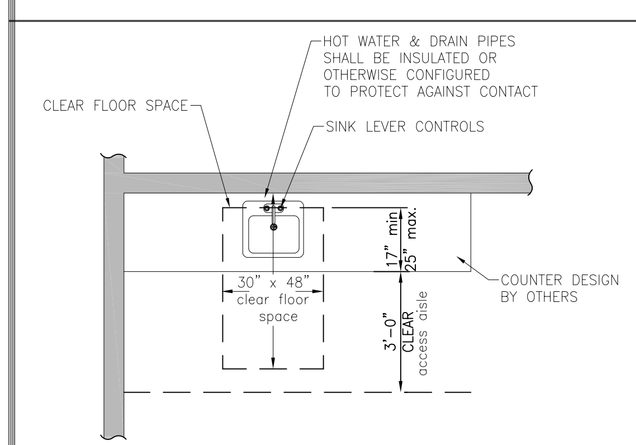

PLAN

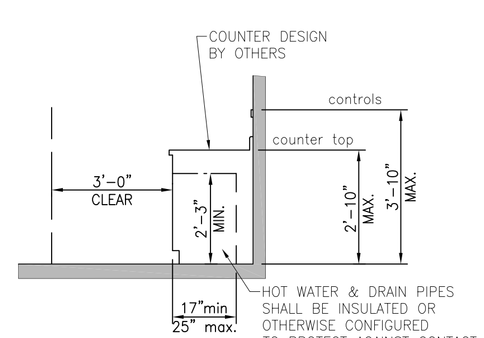

SECTION

TYPICAL COUNTER DIMENSIONS
(SEE ALSO KNEE & TOE CLEARANCES THIS SHEET)

NOTE:

CLEARANCE DIMENSIONS APPLY FOR ALL COUNTERS IN ACCORDANCE WITH THE *American National Standard for Accessible and Usable Buildings and Facilities.* (2010 ADA Standards for Accessible Design).
(COUNTERS DESIGNED BY OTHERS)

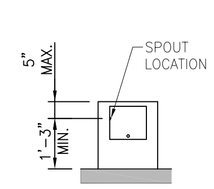

DRINKING FOUNTAIN

NOTES:

SPOUT OUTLET SHALL BE MAX. 36" ABOVE FINISHED FLOOR.

SPOUT SHALL PROVIDE A FLOW OF WATER 4 INCHES HIGH MIN. AND ANGLE OF WATER STREAM SHALL BE MEASURED HORIZONTALLY RELATIVE TO THE FRONT FACE OF THE UNIT. WHERE SPOUTS ARE LOCATED LESS THAN 3 INCHES OF THE FRONT OF THE UNIT, THE ANGLE SHALL BE 30 DEGRESS MAX. WHERE SPOUTS ARE LOCATED BETWEEN 3 INCHES & 5 INCHES OF THE FRONT OF THE UNIT, THE ANGLE SHALL BE 15 DEGRESS MAX.

REGISTERED ARCHITECT
JOHN H. LEASURE
No. 310
STATE OF MAINE

REV.	DATE	STATUS
.	3-30-17	STATE FIRE MARSHAL SUBMISSION
1	4-28-17	SUBMITTED FOR PERMITS

JOHN H. LEASURE ARCHITECT, INC.
6 Q STREET
SOUTH PORTLAND, MAINE 04106

SHWARTZ BUILDING RENOVATIONS
600-604 CONGRESS STREET
PORTLAND, MAINE

SUITE 202-BATHROOM PLAN, ELEVATIONS & GENERAL DETAILS

A23