CITY OF PORTLAND ELECTRONIC STAMP:

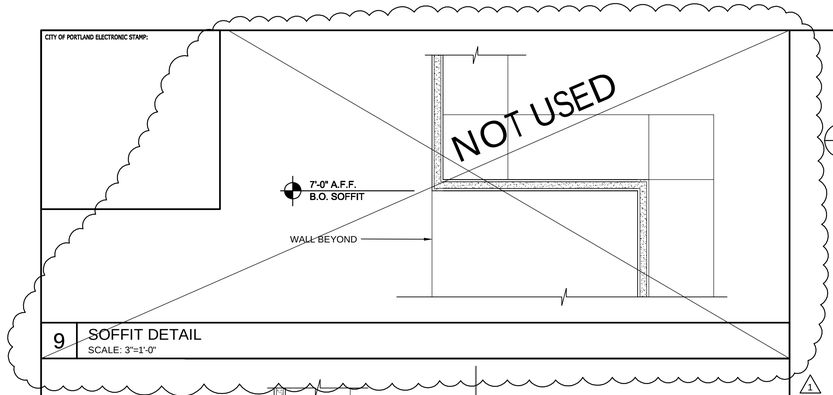

9 SOFFIT DETAIL
SCALE: 3"=1'-0"

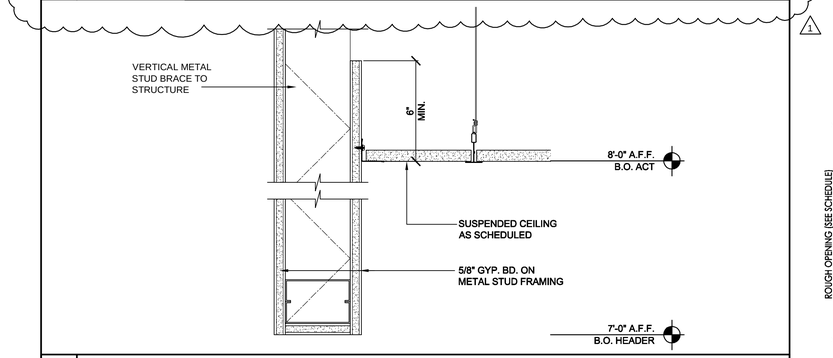

8 SOFFIT DETAIL
SCALE: 3"=1'-0"

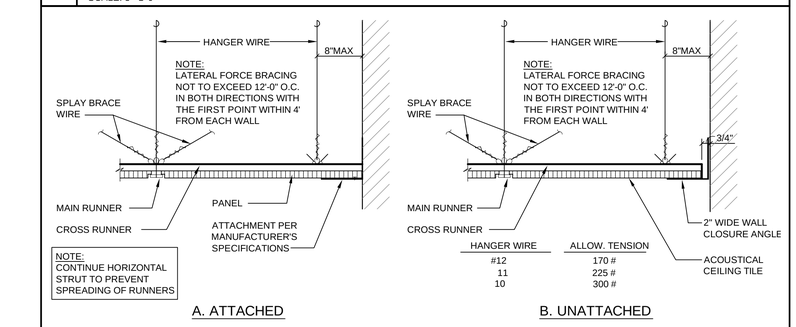

7 TYPICAL SUSPENDED CEILING DETAILS AT WALL
SCALE: 1/4"=1'-0"

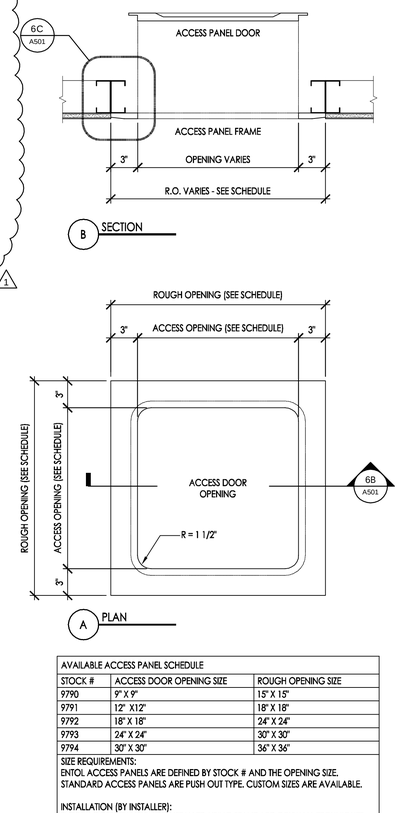

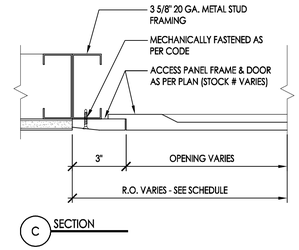

AVAILABLE ACCESS PANEL SCHEDULE		
STOCK #	ACCESS DOOR OPENING SIZE	ROUGH OPENING SIZE
9790	9" X 9"	15" X 15"
9791	12" X12"	18" X 18"
9792	18" X 18"	24" X 24"
9793	24" X 24"	30" X 30"
9794	30" X 30"	36" X 36"

SIZE REQUIREMENTS:
ENTOL ACCESS PANELS ARE DEFINED BY STOCK # AND THE OPENING SIZE. STANDARD ACCESS PANELS ARE PUSH OUT TYPE. CUSTOM SIZES ARE AVAILABLE.

INSTALLATION (BY INSTALLER):
ENTOL ACCESS PANELS ARE INSTALLED USING STANDARD DRYWALL TECHNIQUES. JOINTS ARE FILLED WITH STANDARD TAPE AND JOINT COMPOUND, THEN SANDED. THE ACCESS PANEL HAS AN EDGE THICKNESS TO ACCOMMODATE 5/8" DRYWALL, THEREFOR, SHIMMING MAY BE REQUIRED IF ADJACENT MATERIAL IS NOT 5/8" THICK.

FINISHING (BY INSTALLER):
USE THE SAME METHOD AS DRYWALL.

6 DETAILS AT TYPICAL ACCESS PANEL
SCALE: 1 1/2"=1'-0"

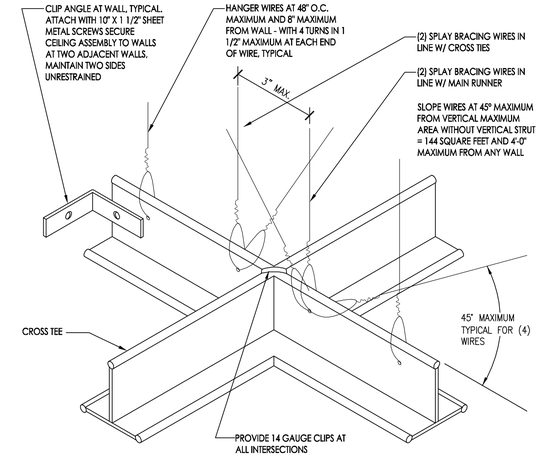

NOTE:
PROVIDE HANGER WIRE AT EACH CORNER OF LIGHT FIXTURE, TYPICAL

PROVIDE 2 1/2" X 20 GAUGE STEEL STUDS AT 12'-0" O.C. EACH WAY AND 6'-0" FROM WALL FOR VERTICAL CEILING STRUTS (TYPICAL AT ALL SUSPENDED CEILINGS WHERE DIAGONAL BRACES OCCUR).

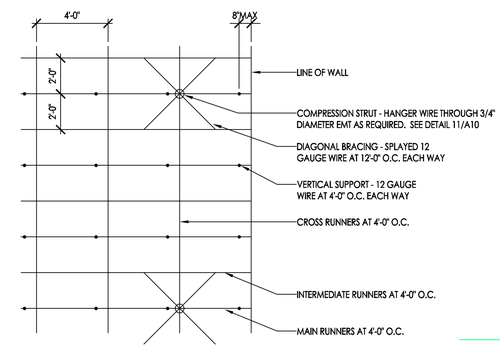

NOTE:
SUPPORT EACH LIGHT FIXTURE INDEPENDENTLY OF CEILING GRID WITH ONE 12 GAUGE WIRE AT EACH OF TWO CORNERS DIAGONALLY ACROSS FROM EACH OTHER

5 TYPICAL SUSPENDED ACOUSTIC TILE CEILING
SCALE: 1/4"=1'-0"

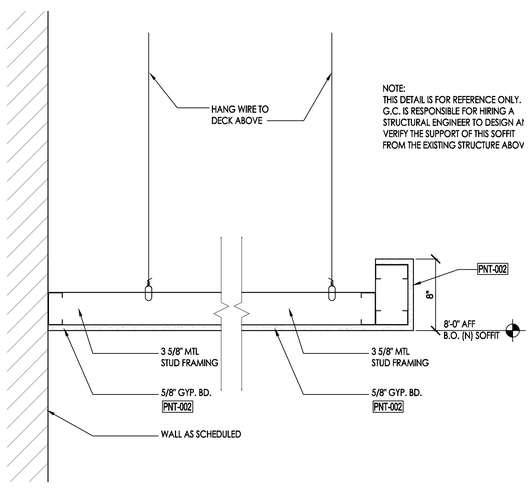

4 TYPICAL SOFFIT DETAIL
SCALE: 1 1/2"=1'-0"

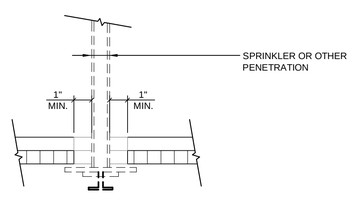

NOTE:
SPRINKLER HEADS AND OTHER PENETRATIONS SHALL HAVE A 2" OVERSIZE RING, SLEEVE, OR ADAPTER THROUGH THE CEILING TILE TO ALLOW FOR FREE MOVEMENT OF AT LEAST 1" IN ALL HORIZONTAL DIRECTIONS. ALTERNATIVELY, A SWING JOINT THAT CAN ACCOMMODATE CEILING MOVEMENT IN ALL HORIZONTAL DIRECTIONS IS PERMITTED TO BE PROVIDED AT THE TOP OF THE SPRINKLER HEAD EXTENSION.

3 TYPICAL CEILING PENETRATION
SCALE: N.T.S.

SCHEDULE	
CONDUIT SIZE	MAXIMUM HEIGHT
1/2" DIA	8'-0"
3/4" DIA	12'-0"
1" DIA	16'-0"
11/4" DIA	27'-0"
1 1/2" DIA	34'-0"
2" DIA	50'-0"

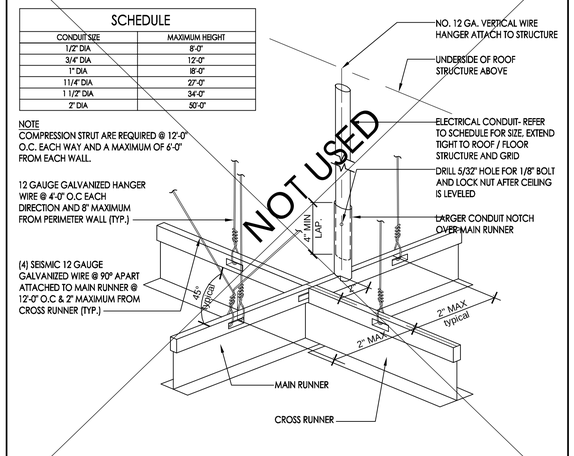

2 COMPRESSION STRUT AND SCHEDULE
SCALE: N.T.S.

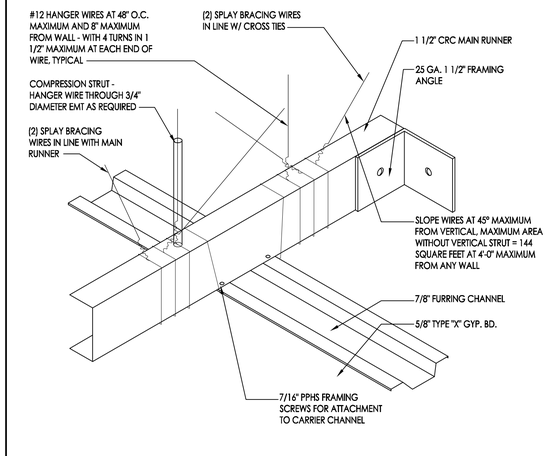

1 TYPICAL SUSPENDED GYP. BD. CEILING
SCALE: 1/4"=1'-0"

CLIENT:
MUSE
255 MASSACHUSETTS AVENUE #801
BOSTON, MA 02115
PHONE: (603) 421-6500
WEBSITE:http://musepaintbar.com/

ARCHITECT:
phase zero design
EIGHT WILCOX STREET
SIMSBURY, CONNECTICUT 06070
PHONE: (860) 264-1624
FAX: (860) 264-1628
WEBSITE:www.phasezerodesign.com

MEP CONSULTANT:

OWNER:

MUSE PAINTBAR
245 COMMERCIAL STREET
PORTLAND, ME 04101

MUSE PAINTBAR
OWNER

REV	DATE	COMMENTS
1	03.06.2014	BUILDING DEPT COMMENTS

ISSUE DATE: 01.20.2014
SCALE: AS NOTED

SEAL:
LICENSED ARCHITECT JAMES R. KIMBALL, JR. No. 2908 STATE OF MAINE

PROJECT NUMBER: 1113158
DRAWN BY: LAH
CHECKED BY: MSG

Copyright (c) by Phase Zero Design Corp.
All Rights Reserved.

SHEET TITLE:
TYPICAL CEILING DETAILS

SHEET NUMBER:
A501