CITY OF PORTLAND ELECTRONIC STAMP:

6 NOT USED
SCALE:

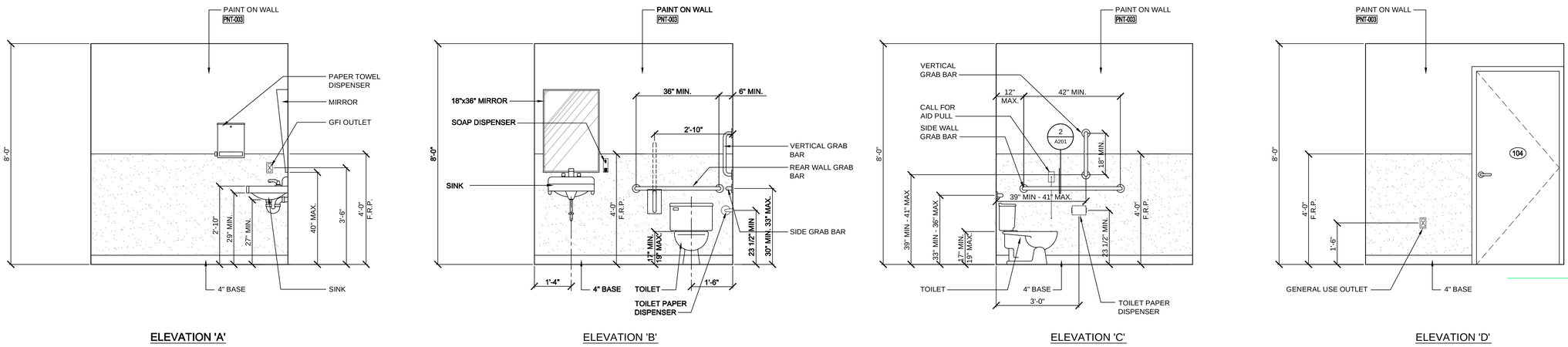

5 RESTROOM ELEVATIONS
SCALE: 1/2"=1'-0"

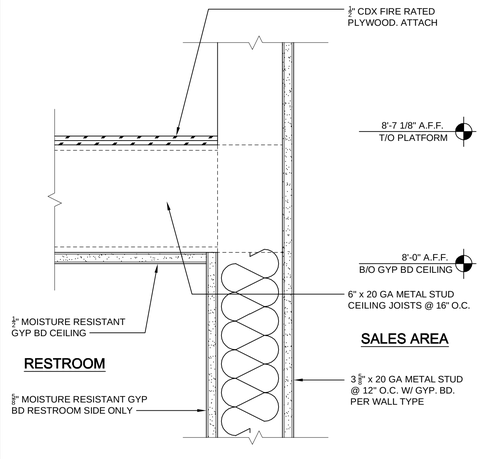

4 NOT USED
SCALE:

3 RESTROOM PLATFORM DETAIL
SCALE: 3" = 1'-0"

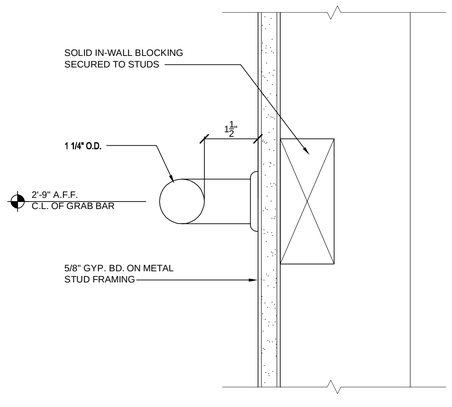

2 GRAB BAR DETAIL
SCALE: 6" = 1'-0"

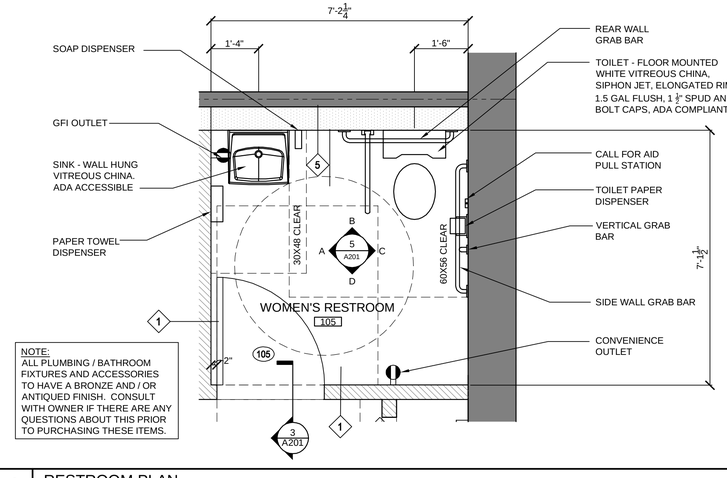

1 RESTROOM PLAN
SCALE: 1/2"=1'-0"

CLIENT:

255 MASSACHUSETTS AVENUE #801
BOSTON, MA 02115
PHONE: (603) 421-6500
WEBSITE:http://musepaintbar.com/

ARCHITECT:

phase zero design

EIGHT WILCOX STREET
SIMSBURY, CONNECTICUT 06070
PHONE: (860) 264-1624
FAX: (860) 264-1628
WEBSITE:www.phasezerodesign.com

MEP CONSULTANT:

OWNER:

MUSE PAINTBAR
245 COMMERCIAL STREET
PORTLAND, ME 04101

MUSE PAINTBAR

OWNER

REV	DATE	COMMENTS

ISSUE DATE: 01.20.2014

SCALE: AS NOTED

SEAL:

LICENSED ARCHITECT JAMES R. KIMBALL, JR. No. 2508 STATE OF MAINE

PROJECT NUMBER: 1113158

DRAWN BY: LAH

CHECKED BY: MSG

Copyright (c) by Phase Zero Design Corp.
All Rights Reserved.

SHEET TITLE:

MISCELLANEOUS DETAILS

SHEET NUMBER:

A201