CITY OF PORTLAND ELECTRONIC STAMP:

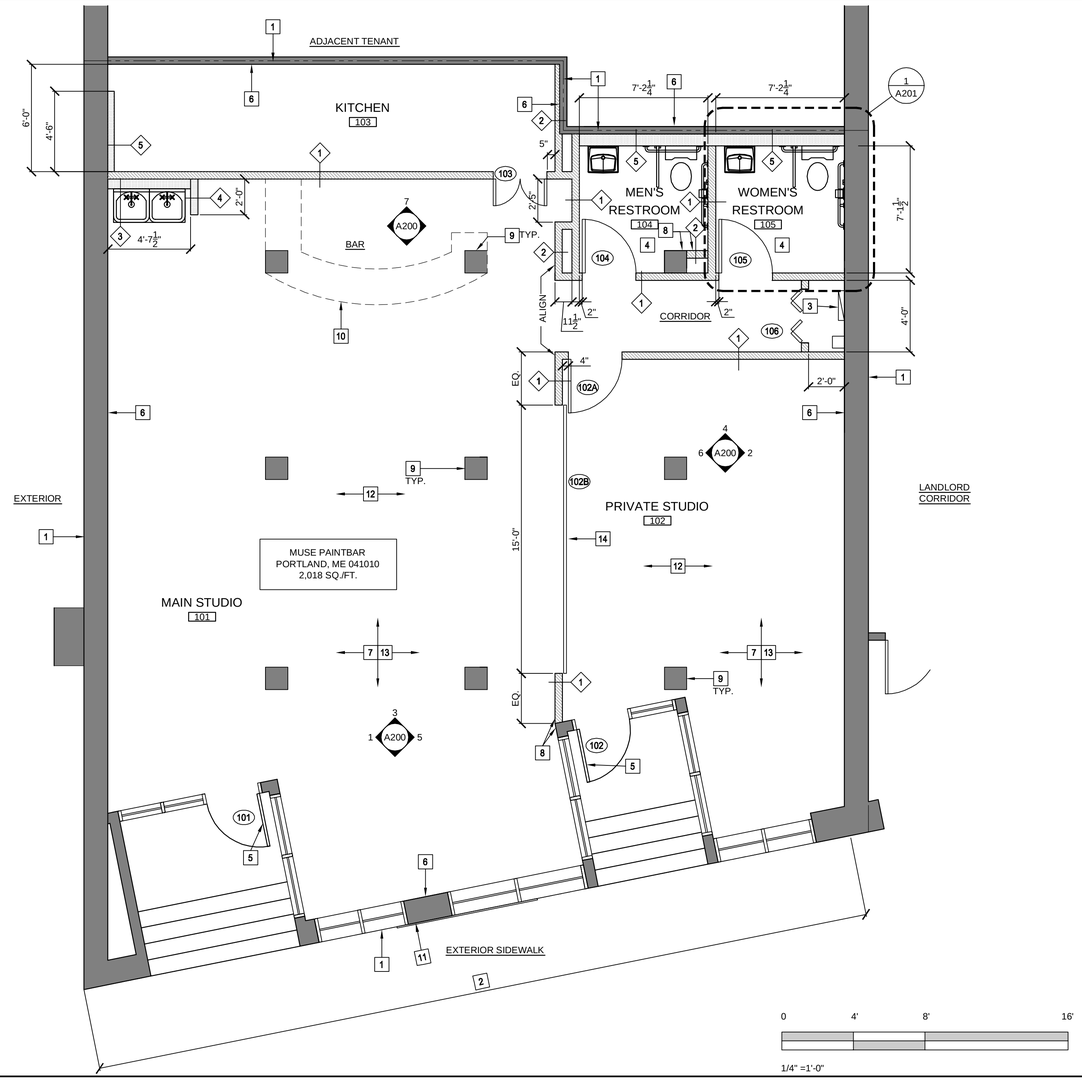


## 1 CONSTRUCTION PLAN
SCALE:1/4"=1'-0"

1. LEASELINE
2. EXISTING STOREFRONT TO REMAIN. PROTECT DURING CONSTRUCTION AND REPAIR AND CLEAN AS REQ'D
3. RELOCATED ELECTRICAL EQUIPMENT, REFER TO POWER PLAN FOR ADDITIONAL INFORMATION.
4. NEW RESTROOM SEE A.201 FOR FURTHER INFORMATION.
5. FIELD VERIFY THE CONDITION AND PROPER OPERATION OF ALL "EXISTING TO REMAIN" DOORS AND HARDWARE.
6. EXISTING DEMISING WALL TO REMAIN. PROTECT DURING CONSTRUCTION. PATCH AND REPAIR AS REQUIRED, TO BRING TO A LIKE NEW CONDITION.
7. EXISTING HVAC SYSTEM TO BE MODIFIED. EXISTING AHU TO BE RELOCATED, AND GC TO MODIFY SUPPLY DUCTS AS REQUIRED PER NEW CONSTRUCTION AND TO PROVIDE ADEQUATE AIR SUPPLY TO EACH SPACE. GC MAY NEED TO BALANCE SYSTEM PRIOR TO TENANT POSSESSION OF SPACE. REFER TO GENERAL HVAC DRAWING FOR ADDITIONAL INFORMATION.
8. GC TO ALIGN CORNER OF NEW WALL WITH CORNER OF EXISTING WALL.
9. EXISTING COLUMN TO REMAIN, PROTECT DURING CONSTRUCTION.PATCH & REPAIR AS REQUIRED
10. OUTLINE OF BAR (SHOWN DASHED FOR CLARITY). REFER TO MILLWORK DRAWINGS FOR ADDITIONAL INFORMATION.
11. MUSE SIGN, SUPPLIED AND INSTALLED BY OWNERS, UNDER SEPARATE PERMIT. LOCATION TO BE DETERMINED IN FIELD BY OWNER.
12. EXISTING WOOD FLOOR TO REMAIN, PROTECT DURING CONSTRUCTION. REFER TO FINISH FLOOR PLAN FOR ADDITIONAL INFORMATION.
13. G.C. TO ENSURE HEATING/COOLING SYSTEMS ARE WORKING PROPERLY AND PROVIDING ENOUGH FRESH AIR INTAKE FOR SPACE OCCUPANCY. THE A.H.U. SHALL BE SERVICED BY THE MECHANICAL CONTRACTOR. FILTERS AND BELTS SHALL BE REPLACED WITH NEW ONES. THE CONDENSER WATER STRAINERS WATERS SHALL BE REMOVED AND CLEANED. THE FRESH AIR DAMPERS SHALL BE TESTED TO BE SURE THEY OPEN AND CLOSE PROPERLY. THE CONDENSATE DRAIN LINE SHALL BE CHECKED AND CLEANED. ANY CHANGES TO THE MECHANICAL SYSTEMS MUST BE DOCUMENTED AND REVIEWED BY THE LANDLORD'S ENGINEERING DEPARTMENT.
14. GARAGE DOOR TRACK TO BE HORIZONTALLY ATTACHED TO DEMISING WALL. GARAGE DOOR TO BE SUPPLIED & INSTALLED BY GARAGE DOOR VENDOR. VENDOR TO ALSO PROVIDE A SAFETY EDGE.

## CONSTRUCTION CODED NOTES

1. TYPICAL FULL HEIGHT WALL: WALL TO BE 3 5/8" MTL STUDS (20 GA) @ 16" OC W/ (1) LAYER 5/8" GYP BD EACH SIDE TO UNDERSIDE OF DECK.
2. TYPICAL FULL HEIGHT FURRED WALL: WALL TO BE METAL STUD FRAMING AS REQUIRED W/ (1) LAYER 5/8" GYP BD ONE SIDE TO UNDERSIDE OF DECK.
3. TYPICAL PARTIAL HEIGHT PLUMBING CHASE: WALL TO BE 6" MTL STUDS (20 GA) @ 16" OC W/ (1) LAYER 5/8" MOISTURE RESISTANT GYP BD STUDIO SIDE TO 4'-0" A.F.F.
4. TYPICAL PARTIAL HEIGHT WALL: WALL TO BE 3 5/8" MTL STUDS (20 GA) @ 16" OC W/ (1) LAYER 5/8" GYP BD EACH SIDE TO 4'-0" A.F.F.
5. TYPICAL PLUMBING CHASE: WALL TO BE MTL STUD FRAMING AS REQUIRED W/ (1) LAYER 5/8" MOISTURE RESISTANT GYP BD RESTROOM SIDE TO UNDERSIDE OF DECK.

WALL TYPES

EXISTING TENANT SEPARATION WALL

NEW INTERIOR PARTITION

WALL KEY

## GENERAL NOTES

1. ALL DOORS TO CONFORM TO ADAAG & ANSI A117.1 FOR HANDICAPPED ACCESSIBILITY.
2. SEE REFLECTED CEILING PLAN FOR LIGHTING INFORMATION.
3. DIMENSIONS ARE FROM THE FACE OF FINISHED WALL (GWB) TO FACE OF FINISHED WALL (GWB) UNLESS OTHERWISE NOTED.
4. APPROVED FIRE EXTINGUISHERS SHALL BE INSTALLED AS REQUIRED BY LOCAL AUTHORITY.
5. ALL OUTSIDE CORNERS AT DRYWALL PARTITIONS AND FURRINGS TO HAVE METAL CORNER BEADS, SPACKLE AND BE SMOOTH.
6. ALL GLASS, INTERIOR AND EXTERIOR TO BE CLEANED WITH A LIQUID DETERGENT AT COMPLETION OF CONSTRUCTION.
7. G.C. SHALL SUPPLY & INSTALL PROPER AND ADEQUATE BLOCKING TO SUPPORT ALL WALL MOUNTED EQUIPMENT AND FIXTURES PRIOR TO CLOSING WALLS.
8. G.C. TO ENSURE THAT ALL NEW AND EXISTING WALLS ARE LEVEL AND SMOOTH, AS REQUIRED FOR INSTALLING NEW FINISHES.
9. ALL "AS-BUILT" PLANS AND EQUIPMENT CUT SHEETS SHALL BE DELIVERED TO THE LANDLORD'S MANAGEMENT OFFICE UPON COMPLETION OF THE TENANT BUILD-OUT.
10. ALL DEMOLITION AND CONSTRUCTION WORK WILL BE SCHEDULED BETWEEN 8:00 A.M. AND 5:00 P.M. TO PREVENT DISRUPTION OF THE RESIDENTIAL TENANTS LIVING ABOVE.
11. A "HOT WORKS" PERMIT MUST BE COMPLETED PRIOR TO ANY SOLDERING, OR FLAME CUTTING.

## DOOR SCHEDULE

| DOOR ID | ROOM NAME | DOOR: DOOR MATERIAL- TYPE (SEE 3/A101) | DOOR: DOOR SIZE (WxH) | FRAME: FRAME MATERIAL- TYPE (SEE 3/A101) | FRAME: DETAIL NUMBER: HEAD DETAIL | JAMB DETAIL | SADDLE DETAIL | FIRE RATING: 2-HOUR | SIXTY MINUTES | FORTY FIVE MINUTES | TWENTY MINUTES | NOT REQUIRED | HARDWARE-SEE SPECIFICATIONS: FIRECODE REQ.: PANIC RELEASE LATCH | POSITIVE LATCHING | AUTOMATIC CLOSER | ELECTRO-MECH. HOLD | DELAYED ACTION CLOSER | 180° SWING | DISABLED REQ.: LEVER HANDLES | TACTILE WARNING | ACCESSIBLE THRESHOLD | KICK PLATE | PUSH PLATES | LOCKSET: PRIVACY | PASSAGE | CLASSROOM | OFFICE | STORAGE | ENTRY | MISC. HARDWARE: FLUSH BOLTS TOP & BOTT. | PULLS | DEADBOLTS | WEATHERSTRIPPING | STRIKE | SILENCERS | BUTTS | FLOOR STOP | WALL STOP | HOLD OPEN | REMARKS |
|---|---|---|---|---|---|---|---|---|---|---|---|---|---|---|---|---|---|---|---|---|---|---|---|---|---|---|---|---|---|---|---|---|---|---|---|---|---|---|---|---|---|
| 101 | MAIN ENTRANCE | EXISTING | 3'-0" x 7'-8" | EXISTING | -- | | -- | | | | | ○ | | ○ | ○ | | | | ○ | | ○ | | | | | | | | ○ | | | | ○ | ○ | | | | | | | EXISTING TO REMAIN |
| 102 | MAIN ENTRANCE | EXISTING | 3'-0" x 7'-8" | EXISTING | -- | | -- | | | | | ○ | | ○ | ○ | | | | ○ | | ○ | | | | | | | | ○ | | | | ○ | ○ | | | | | | | EXISTING TO REMAIN |
| 102A | PRIVATE STUDIO | WOOD/1 | 3'-0" x 7'-0" | HM | 2 | | -- | | | | | ● | | ● | ● | | | | ● | | | | | | | | ● | | | | | | | ● | 3 | 3 | | | | | |
| 102B | PRIVATE STUDIO | WOOD/4 | 18'-0" x 8'-10" | HM | 2 | | -- | | | | | ● | | | | | | | | | | | | | | | | | | | | | | | | | | | | | GARAGE DOOR SEE DETAILS |
| 103 | KITCHEN | WOOD/3 | (2) 1'-6" X 4'-0" | - | - | | -- | | | | | ● | | | | | | | | | | | | | | | | | | | | | | | | | | | | | |
| 104 | RESTROOM | HM/2 | 3'-0" x 7'-0" | HM | 2 | | -- | | | | | ● | | ● | ● | | | | ● | ● | | ● | | ● | | | | | | | | | | ● | 3 | 3 | | | | | |
| 105 | RESTROOM | EXISTING | 3'-0" x 7'-0" | EXISTING | 2 | | -- | | | | | ○ | | ○ | ○ | | | | ○ | ○ | | ○ | | ○ | | | | | | | | | | ○ | 3 | 3 | | | | | |
| 106 | ELEC. CLOSET | WOOD/5 | (2)1'-6" x 7'-0" | HM | 2 | | -- | | | | | ● | | | | | | | | | | | | | | | | | | | | | | ○ | 3 | 3 | | | | | |

● INDICATES REQUIRED WORK

○ INDICATES EXISTING

⊕ INDICATES REUSE RELOCATED EXISTING

DOOR GENERAL NOTES:
1. WOOD DOORS TO BE FLUSH PRE-FINISHED SOLID CORE WOOD DOORS.
2. H.M. FRAMES TO BE FACTORY FINISHED AND READY FOR PAINT BY OTHERS.
3. KEY ALL LOCKED INTERIOR DOORS ALIKE
4. KEY ALL EXTERIOR DOORS ALIKE
5. CHANGE TUMBLERS & RE-KEY DOORS UPON TURNOVER OF SPACE TO TENANT
6. ALL DOOR HARDWARE SHALL COMPLY WITH FEDERAL AND STATE ACCESSIBILITY REQUIREMENTS.
7. ALL EXIT DOORS TO BE OPENABLE FROM INSIDE WITHOUT USE OF A KEY, SPECIAL KNOWLEDGE OR EFFORT.

DOOR GENERAL NOTES:
8. THE MAXIMUM FORCE REQUIRED TO OPERATE ANY DOOR SHALL COMPLY AS FOLLOWS
   8.a. INTERIOR DOORS = 5LBS
   8.b. EXTERIOR DOORS = 8.5LBS
   8.c. FIRE-RATED DOORS = MINIMUM ALLOWABLE BY APPROPRIATE ADMINISTRATIVE AUTHORITY.
9. ALL HANDLES AND PULLS TO BE INSTALLED AT 39" A.F.F. TO CENTERLINE.

DOOR HARDWARE SPECIFICATIONS:
1. ALL HARDWARE FINISHES TO BE 626 SATIN CHROME UNLESS OTHERWISE NOTED.
2. DOOR LOCKSET AND LATCHSETS SHALL COMPLY WITH ANSI/BHMA A156.2 AND BE SCHLAGE, ND-SERIES, GRADE 1, SPARTA, OR APPROVED EQUAL.
3. DOOR CLOSERS SHALL COMPLY WITH ANSI/BHMA A156.4 AND BE LCN 4111.
4. ALL HINGES SHALL COMPLY WITH ANSI/BHMA A156.1 AND BE STAINLESS STEEL WITH STAINLESS STEEL PINS, HEAVY DUTY BALL BEARING, AND HAVE NON-REMOVBLE PINS.

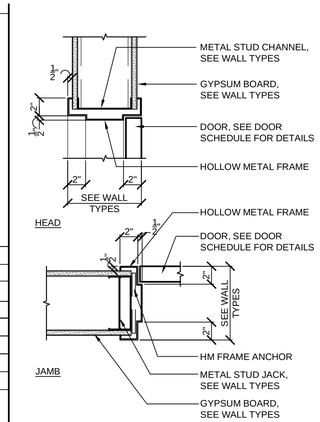


## 2 DOOR DETAILS
SCALE:1 1/2"=1'-0"

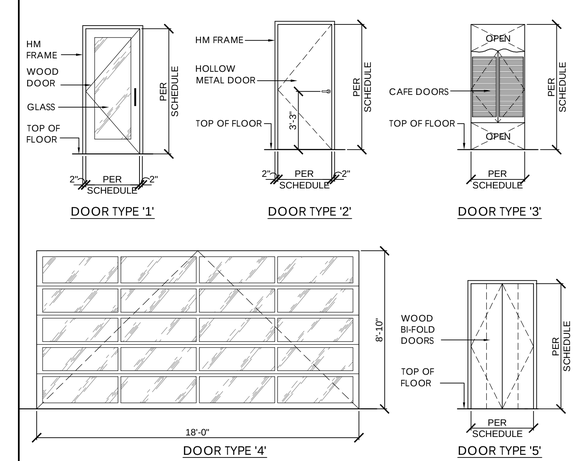


## 3 DOOR TYPES
SCALE:1/4"=1'-0"

CLIENT:

255 MASSACHUSETTS AVENUE #801
BOSTON, MA 02115
PHONE: (603) 421-6500
WEBSITE:http://musepaintbar.com/

ARCHITECT:

phase zero design

EIGHT WILCOX STREET
SIMSBURY, CONNECTICUT 06070
PHONE: (860) 264-1624
FAX: (860) 264-1628
WEBSITE:www.phasezerodesign.com

MEP CONSULTANT:

OWNER:

# MUSE PAINTBAR
245 COMMERCIAL STREET
PORTLAND, ME 04101

MUSE PAINTBAR

OWNER

| REV | DATE | COMMENTS |
|---|---|---|

ISSUE DATE: 01.20.2014

SCALE: AS NOTED

SEAL:

LICENSED ARCHITECT JAMES R. KIMBALL, JR. No. 2908 STATE OF MAINE

PROJECT NUMBER: 1113158

DRAWN BY: LAH

CHECKED BY: MSG

Copyright (c) by Phase Zero Design Corp. All Rights Reserved.

SHEET TITLE:

CONSTRUCTION PLAN

SHEET NUMBER:

A101