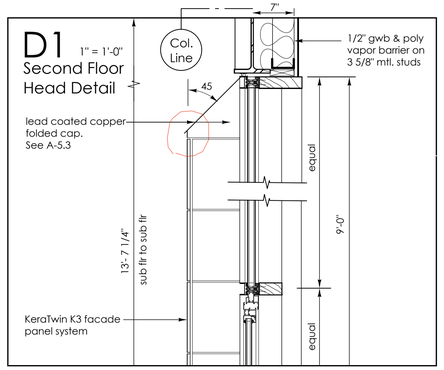


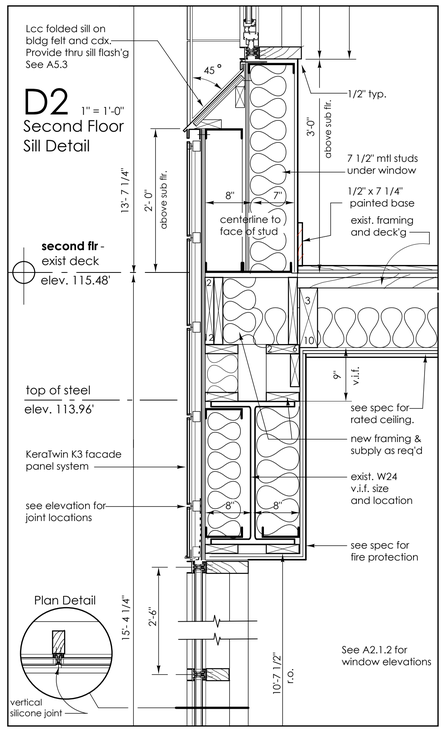


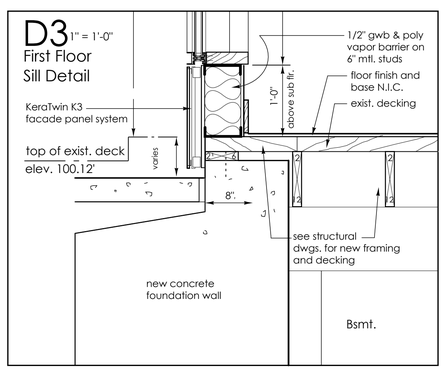


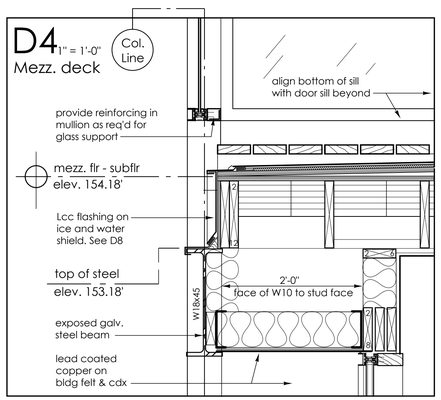


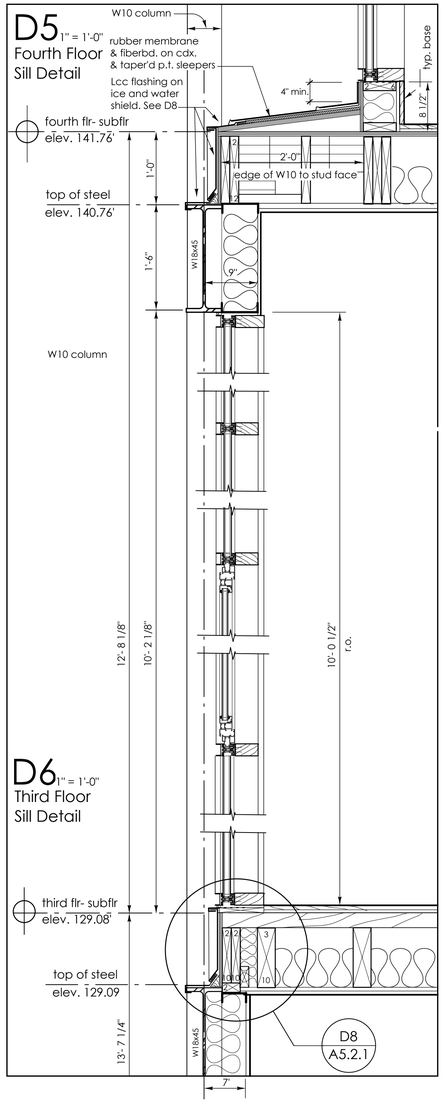


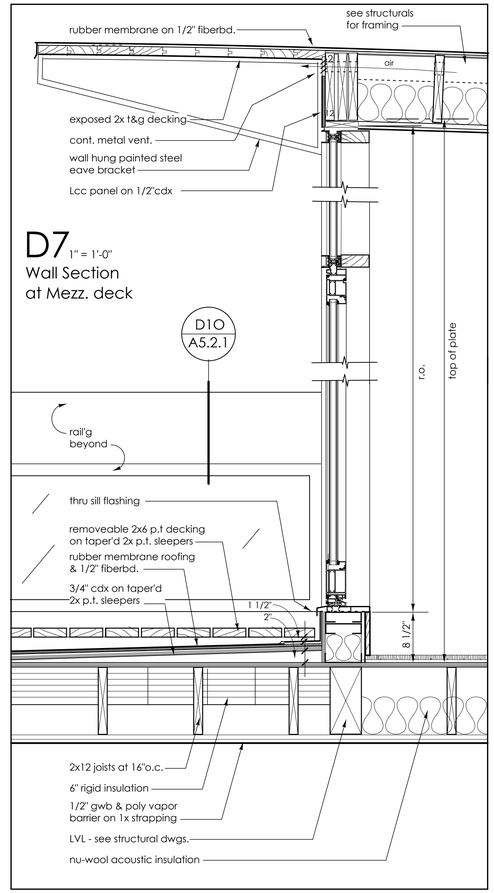


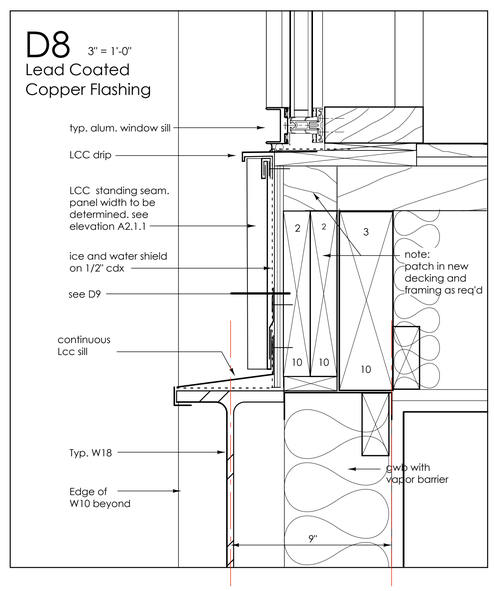


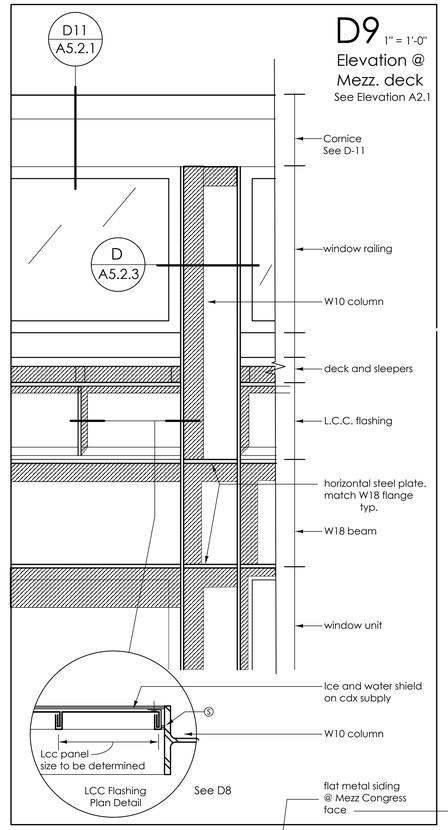


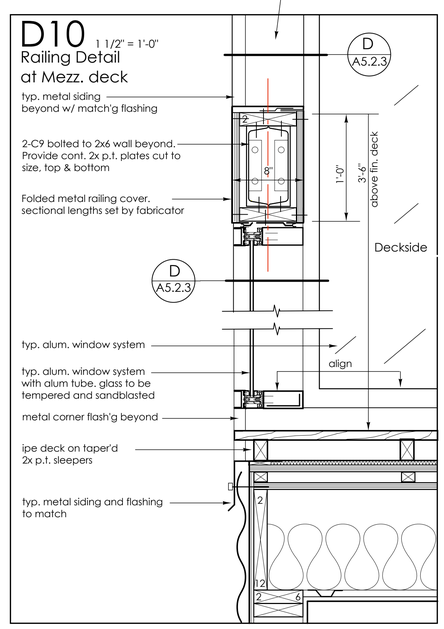


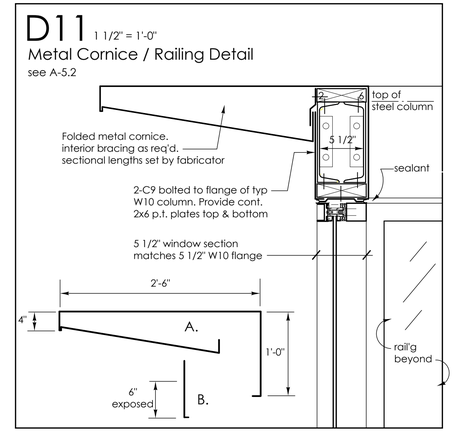


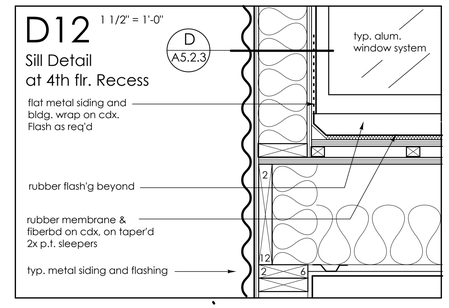


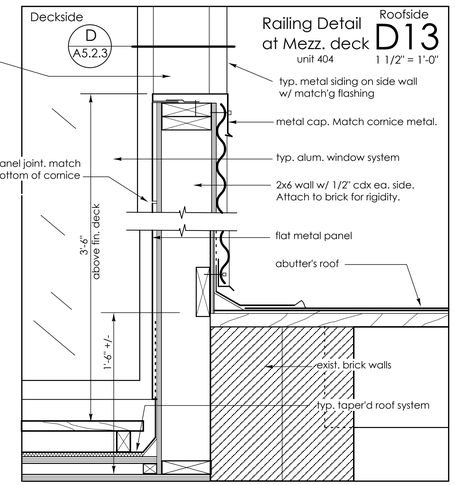


490 Congress Street
Portland, Maine

Kimball Building, LLC
Portland, Maine

James Sterling AIA
Architect
142 High Street
Portland, Maine

WALL SECTIONS

scale: As noted

date: 20 May, 2005

A-5.2.1