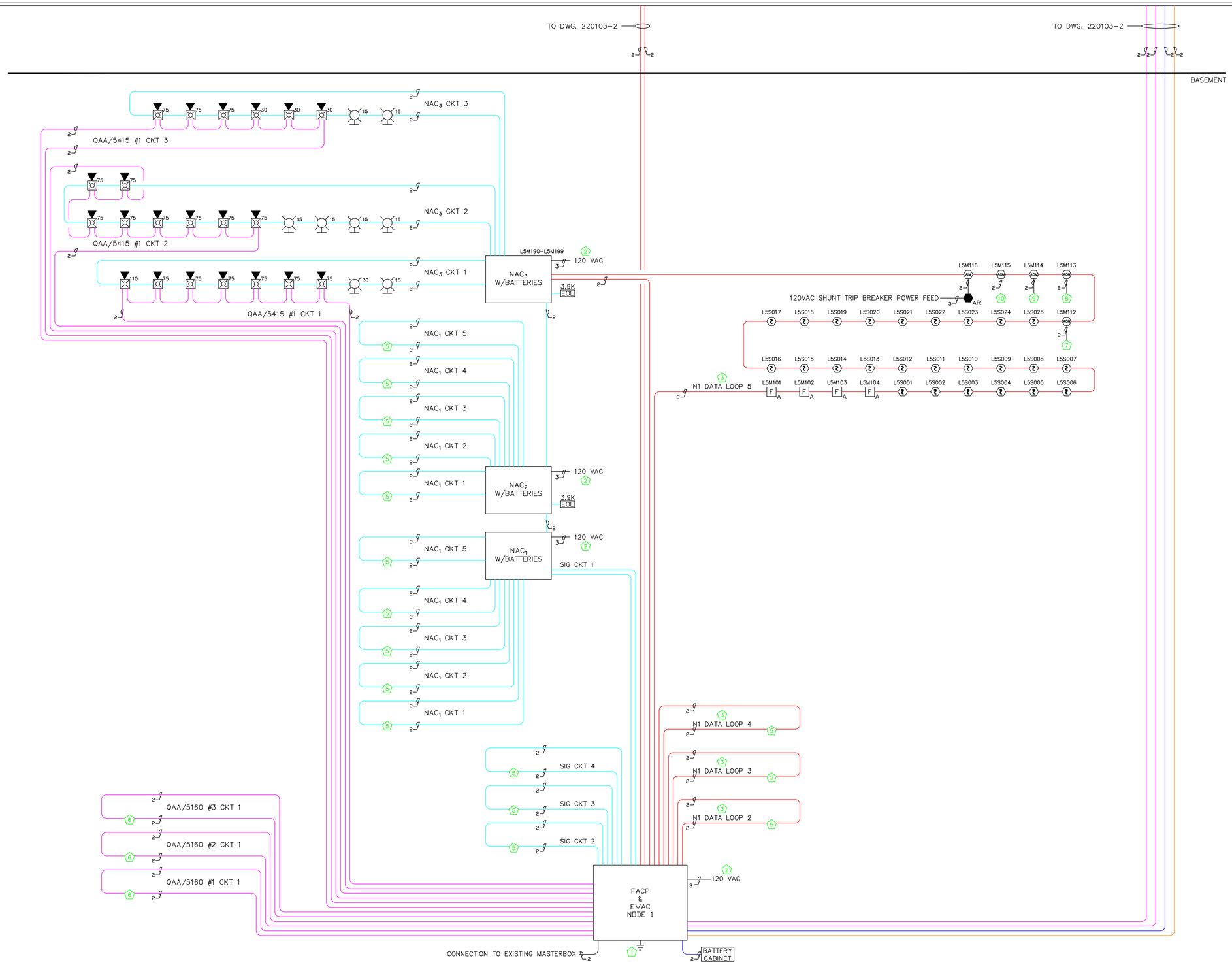

NOTICE

Ground terminal must be connected to Earth Ground per Article 760 of the National Electric Code. Failure to make a proper Earth Ground connection to a metal cold water pipe or a driven Ground Rod to this terminal will result in loss of Lightning protection, reduce the tolerance of the system to transients and will adversely affect its operation. Panel Neutral or Conduit Ground is not acceptable.
Minimum Wire Size: 12 AWG

Signal Circuit Power Boosters are supplied for additional NAC power as well as to allow the installer to use smaller gauge wire over shorter signal runs.
The Signal Circuit Power Booster should be installed in the field in close proximity to the Notification Appliances they are powering.

WARNING

THE INSTALLING CONTRACTOR IS RESPONSIBLE FOR THE WIRING OF ALL DEVICES, THE WIRE TYPE AND THAT ALL WIRE SIZES MEET STATE AND LOCAL CODE REQUIREMENTS. THE INSTALLING CONTRACTOR IS ALSO RESPONSIBLE THAT THE INSTALLATION IS FREE OF ALL DEFECTS.

WIRING SPECIFICATIONS

- DATA/SLC– 16 AWG MIN 12AWG MAX. TWISTED CABLE. SHIELDED CABLE NOT ACCEPTED.
- ZONE/IDC– 16 AWG MIN 12AWG MAX.
- SIGNAL/NAC– 16AWG MIN 12AWG MAX.
- POWER– 16AWG MIN 12AWG MAX
- SPEAKER– 16AWG MIN. 12AWG MAX. TWISTED SHIELDED CABLE. SHIELDS MUST BE CONNECTED AT EACH TERMINATION POINT AND TAPED TO ISOLATE FROM GROUND. GROUND CONNECTION TO BE MADE AT VOICE PANEL ONLY.
- ANNUNCIATOR DATA– 16AWG MIN. 12AWG MAX. TWISTED SHIELDED CABLE.

POWER LIMITED AND NON POWER LIMITED CABLE CAN NOT BE RUN THROUGH THE SAME RACEWAY.

NOTES

1. Must be grounded to a driven ground rod or the cold water pipe on the street side of the main shut off valve.
2. No AC voltage on any terminal other than those specified.
3. Maximum line resistance is 40 Ohms, maximum line capacitance is 0.5 micro-farad per loop.
4. Existing Notification Devices Device Type & Quantity Unknown.
5. Existing Initating Devices. Device type & Quantity Unknown.
6. Existing Voice Devices. Device type & Quantity Unknown.
7. To Elevator Controller, Recall Elevator To Primary Floor. Component must be installed within 3' of the controlled device.
8. To Elevator Controller, Recall Elevator To Alternate Floor. Component must be installed within 3' of the controlled device.
9. To Elevator Controller, Firemans Hat Warning Light. Component must be installed within 3' of the controlled device.
10. To Elevator Shunt Trip Breaker. Component must be installed within 3' of the controlled device.

Reviewed for Code Compliance
Inspections Division
Approved with Conditions
Date: 06/09/15

GENERAL

1. ALL Fire Alarm Syste comply with the Natio Code, Applicable Stat and Safety Codes, a coordinated with the Having Jurisdiction.
2. CAUTION: DO NOT conn control panel (batte until all other Field and connected.
3. DO NOT install F.A.C.P. or smoke detectors in any unheated area.
4. DO NOT install any A.C. current carrying conductors close to or in the same raceway with fire alarm system conductors.
5. Dotted lines indicate factory wiring. Solid lines indicate connections to be made by the installer.
6. See Installation Manual for additional wiring instructions.
7. All relays are shown in normal supervisory condition. All relay dry contacts 28 VDC @ 1A ONLY.
8. FACP Indicating circuit outputs are 1.7 amps at 24 VDC per circuit INX/10A circuit outputs are 2.5 amps. each. Not to exceed 10 amps total.
9. Cabinet Dimensions:

NODE 1 (BBX-FXMNS) - L 61.5000" W 20.0000" D 9.0000"
INX-10A - L 20.0000" W 14.5000" D 4.5000"
FX-LDCR - L 25.0000" W 15.0000" D 5.5000"

SPECIAL FUNCTIONS

All Wiring To Be Class A.
Existing Strobes Are Not Synchronized & Will Not Be Synchronized With New Devices.

QTY	LEGEND
4	Addressable Manual Pull Station
25	Analog Photoelectric Smoke Detector
1	Auxiliary Relay
4	Addressable Relay Module
1	Addressable Monitor Module
8	Strobe
21	Speaker Strobe
15	15 Candela
30	30 Candela
75	75 Candela
110	110 Candela
	Ground

SIGNAL CIRCUITS

CKT #	TOTAL LOAD	CAPACITY %
NAC_3 CKT 1	1.3900	56%
NAC_3 CKT 2	1.6000	64%
NAC_3 CKT 3	0.9000	36%
NAC_3 CKT 4	SPARE	0%
NAC_3 CKT 5	SPARE	0%

WIRE SIZE TO BE DETERMINED BY INSTALLING CONTRACTOR IN FIELD. ALL SYSTEM WIRING SHALL BE 16AWG MIN. AND 12AWG MAX.

Audio Note:
Existing System is 70 VAC.
New Speaker devices are 25 VAC.
As a rule of thumb, speaker taps should be set according to strobe candella ratings.
15cd = 1/4 watt, 30cd = 1/2 watt, 75cd = 1 watt, & 110cd = 2 watts.
Individual speakers that do not have a strobe are generally set to 1/4 watt.
Ambient conditions in building may require further adjustments to meet the required decibel level.

Prepared By:
Mammoth Fire Alarms Incorporated
1-800-995-9808
Lowell, MA 01854-3126
Property Protection Monitoring Incorporated 1-877-784-3384 Lowell, MA 01854-3126 24/HR UL Listed Signal Monitoring
Mammoth Fire Protection Systems Incorporated 1-877-827-3368 Lowell, MA 01854-3126 Fire Sprinkler & Clean Agent Suppression Systems

Scale: None	Approved By:	Drawn By: MAD
Date: 3/20/15	Mike K 3/20/15	Revised:

Project Info:
Maine College of Art (Basement Renovation)
522 Congress Street Portland, Me.

Prepared For:
Mancini Electric
179 Sheridan Street Portland, Me. 04101

FA-101

ADDRESS DIRECTORY

DATA LOOP 5

ADDRESS	MODULE	# OF DEVICES	LOCATION/DEVICES	TYPE	LOGIC OUTPUTS
L5S001	2251	1	BASEMENT SMOKE OVER FACP		GENERAL ALARM
L5S002	2251	1	BASEMENT SMOKE ART GALLERY		GENERAL ALARM
L5S003	2251	1	BASEMENT SMOKE ART GALLERY		GENERAL ALARM
L5S004	2251	1	BASEMENT SMOKE ART GALLERY		GENERAL ALARM
L5S005	2251	1	BASEMENT SMOKE ART GALLERY		GENERAL ALARM
L5S006	2251	1	BASEMENT SMOKE MAIN STAIRS		GENERAL ALARM
L5S007	2251	1	BASEMENT SMOKE GALLERY STORAGE		GENERAL ALARM
L5S008	2251	1	BASEMENT SMOKE GALLERY STORAGE		GENERAL ALARM
L5S009	2251	1	BASEMENT SMOKE UTILITY ROOM		GENERAL ALARM
L5S010	2251	1	BASEMENT SMOKE PUMP ROOM		GENERAL ALARM
L5S011	2251	1	BASEMENT SMOKE FRT ELEV LOBBY		GENERAL ALARM
L5S012	2251	1	BASEMENT SMOKE HALL 3		GENERAL ALARM
L5S013	2251	1	BASEMENT SMOKE HALL 3		GENERAL ALARM
L5S014	2251	1	BASEMENT SMOKE HALL 3		GENERAL ALARM
L5S015	2251	1	BASEMENT SMOKE HALL 1		GENERAL ALARM
L5S016	2251	1	BASEMENT SMOKE HALL 1		GENERAL ALARM
L5S017	2251	1	BASEMET SMOKE BY COMP LAB		GENERAL ALARM
L5S018	2251	1	BASEMET SMOKE BY NEW STAIRS		GENERAL ALARM
L5S019	2251	1	BASEMENT SMOKE HALL 2		GENERAL ALARM
L5S020	2251	1	BASEEMENT SMOKE HALL 2		GENERAL ALARM
L5S021	2251	1	BASEMENET SMOKE ELEV LOBBY		GENERAL ALARM
L5S022	2251	1	BASEMENT SMOKE GALLERY LOBBY		GENERAL ALARM
L5S023	2251	1	BASEMENT SMOKE STORAGE		GENERAL ALARM
L5S024	2251	1	BASEMENT SMOKE REAR STAIR		GENERAL ALARM
L5S025	2251	1	BASEMENT SMOKE DET TBD		GENERAL ALARM
L5M101	710	1	BASEMENT PULL BY MAIN STAIRS		GENERAL ALARM
L5M102	710	1	BASEMENT PULL BY NEW STAIRS		GENERAL ALARM
L5M103	710	1	BASEMENT PULL BY REAR STAIRS		GENERAL ALARM
L5M104	710	1	BASEMENT PULL BY FREIGHT ELEV		GENERAL ALARM
L5M112	M500R	1	PRIMARY ELEV RECALL		Elev Recall Sequence to be Det on Site
L5M113	M500R	1	ALT ELEVATOR RECALL		Elev Recall Sequence to be Det on Site
L5M114	M500R	1	FIRE HAT		Elev Recall Sequence to be Det on Site
L5M115	M500R	1	SHUNT TRIP		Elev Recall Sequence to be Det on Site
L5M116	M500M	1	MONITOR SHUNT TRIP POWER		Supervisory
L5M190	Input		Basement INX Common Trouble	Trbl	Trouble Input Only
L5M191	Rly		Basement INX Silence	Rly	Correlate to Signal Silence Only
L5M192	Input		Basement INX AC Failure Trouble	Trbl	Trouble Input Only
L5M193	Input		Basement INX Battery Trouble	Trbl	Trouble Input Only
L5M194	Input		Basement INX Ground Fault Trouble	Trbl	Trouble Input Only
L5M195	Sig		Basement INX Circuit 1 Control/Status	Sig	GENERAL ALARM
L5M196	Sig		Basement INX Circuit 2 Control/Status	Sig	GENERAL ALARM
L5M197	Sig		Basement INX Circuit 3 Control/Status	Sig	GENERAL ALARM
L5M198	Sig		Basement INX Circuit 4 Control/Status	Sig	GENERAL ALARM
L5M199	Sig		Basement INX Circuit 5 Control/Status	Sig	GENERAL ALARM

SECOND FLOOR

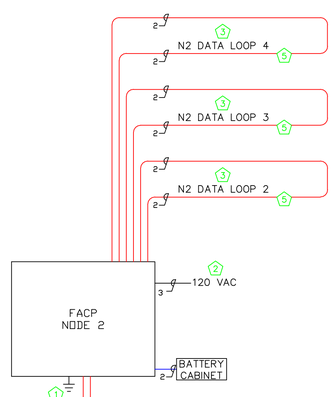

FIRST FLOOR

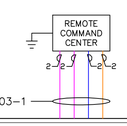

FROM DWG. 220103-1

FROM DWG. 220103-1

NOTICE

Ground terminal must be connected to Earth Ground per Article 760 of the National Electric Code. Failure to make a proper Earth Ground connection to a metal cold water pipe or a driven Ground Rod to this terminal will result in loss of Lightning protection, reduce the tolerance of the system to transients and will adversely affect its operation. Panel Neutral or Conduit Ground is not acceptable.
Minimum Wire Size: 12 AWG

Signal Circuit Power Boosters are supplied for additional NAC power as well as to allow the installer to use smaller gauge wire over shorter signal runs.
The Signal Circuit Power Booster should be installed in the field in close proximity to the Notification Appliances they are powering.

WARNING

THE INSTALLING CONTRACTOR IS RESPONSIBLE FOR THE WIRING OF ALL DEVICES, THE WIRE TYPE AND THAT ALL WIRE SIZES MEET STATE AND LOCAL CODE REQUIREMENTS. THE INSTALLING CONTRACTOR IS ALSO RESPONSIBLE THAT THE INSTALLATION IS FREE OF ALL DEFECTS.

WIRING SPECIFICATIONS

- DATA/SLC– 16 AWG MIN 12AWG MAX. TWISTED CABLE. SHIELDED CABLE NOT ACCEPTED.
- SIGNAL/NAC– 16AWG MIN 12AWG MAX.
- POWER– 16AWG MIN 12AWG MAX
- SPEAKER– 16AWG MIN. 12AWG MAX. TWISTED SHIELDED CABLE. SHIELDS MUST BE CONNECTED AT EACH TERMINATION POINT AND TAPED TO ISOLATE FROM GROUND. GROUND CONNECTION TO BE MADE AT VOICE PANEL ONLY.
- ANNUNCIATOR DATA– 16AWG MIN. 12AWG MAX. TWISTED SHIELDED CABLE.

POWER LIMITED AND NON POWER LIMITED CABLE CAN NOT BE RUN THROUGH THE SAME RACEWAY.

NOTES

1. Must be grounded to a driven ground rod or the cold water pipe on the street side of the main shut off valve.
2. No AC voltage on any terminal other than those specified.
3. Maximum line resistance is 40 Ohms, maximum line capacitance is 0.5 micro-farad per loop.
4. Existing Notification Devices Device Type & Quantity Unknown.
5. Existing Initating Devices. Device type & Quantity Unknown.
6. Existing Voice Devices. Device type & Quantity Unknown.
7. To Elevator Controller, Recall Elevator To Primary Floor. Component must be installed within 3' of the controlled device.
8. To Elevator Controller, Recall Elevator To Alternate Floor. Component must be installed within 3' of the controlled device.
9. To Elevator Controller, Firemans Hat Warning Light. Component must be installed within 3' of the controlled device.
10. To Elevator Shunt Trip Breaker. Component must be installed within 3' of the controlled device.

Reviewed for Code Compliance
Inspections Division
Approved with Conditions
Date: 06/09/15

GENERAL

1. ALL Fire Alarm Syste comply with the Natio Code, Applicable Stat and Safety Codes, a coordinated with the Having Jurisdiction.
2. CAUTION DO NOT conn control panel (batte until all other Field and connected.
3. DO NOT install F.A.C.P. or smoke detectors in any unheated area.
4. DO NOT install any A.C. current carrying conductors close to or in the same raceway with fire alarm system conductors.
5. Dotted lines indicate factory wiring. Solid lines indicate connections to be made by the installer.
6. See Installation Manual for additional wiring instructions.
7. All relays are shown in normal supervisory condition. All relay dry contacts 28 VDC @ 1A ONLY.
8. FACP Indicating circuit outputs are 1.7 amps at 24 VDC per circuit INX/10A circuit outputs are 2.5 amps. each. Not to exceed 10 amps total.
9. Cabinet Dimensions:

NODE 1 (BBX-FXMNS) - L 61.5000" W 20.0000" D 9.0000"
INX-10A - L 20.0000" W 14.5000" D 4.5000"
FX-LDCR - L 25.0000" W 15.0000" D 5.5000"

SPECIAL FUNCTIONS

All Wiring To Be Class A.
Existing Strobes Are Not Synchronized & Will Not Be Synchronized With New Devices.

Audio Note:
Existing System is 70 VAC.
New Speaker devices are 25 VAC.
As a rule of thumb, speaker taps should be set according to strobe candella ratings.
15cd = 1/4 watt, 30cd = 1/2 watt, 75cd = 1 watt, & 110cd = 2 watts.
Individual speakers that do not have a strobe are generally set to 1/4 watt.
Ambient conditions in building may require further adjustments to meet the required decibel level.

Prepared By:
Mammoth Fire Alarms Incorporated
1-800-995-9808
Lowell, MA 01854-3126

Property Protection Monitoring Incorporated
1-877-794-3344
Lowell, MA 01854-3126
24HR UL Listed Signal Monitoring

Mammoth Fire Protection Systems Incorporated
1-877-637-3569
Lowell, MA 01854-3126
Fire Sprinkler & Clean Agent Suppression Systems

Scale: None	Approved By:	Drawn By: MAD
Date: 3/20/15	Mike K 3/20/15	Revised:

Project Info:
Maine College of Art (Basement Renovation)
522 Congress Street Portland, Me.

Prepared For:
Mancini Electric
179 Sheridan Street Portland, Me. 04101

FA-102

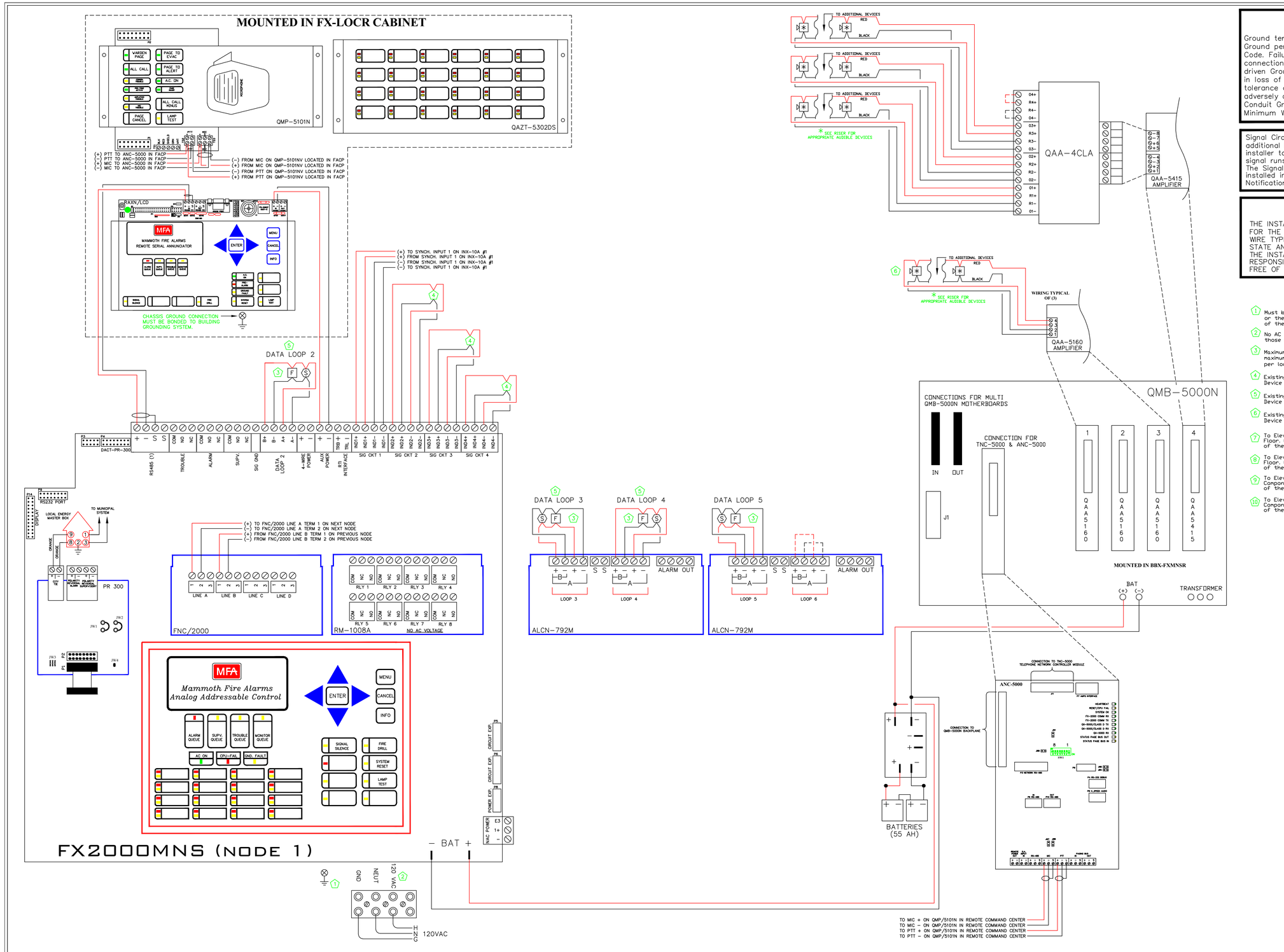

NOTICE

Ground terminal must be connected to Earth Ground per Article 760 of the National Electric Code. Failure to make a proper Earth Ground connection to a metal cold water pipe or a driven Ground Rod to this terminal will result in loss of Lightning protection, reduce the tolerance of the system to transients and will adversely affect its operation. Panel Neutral or Conduit Ground is not acceptable.
Minimum Wire Size: 12 AWG

Signal Circuit Power Boosters are supplied for additional NAC power as well as to allow the installer to use smaller gauge wire over shorter signal runs.
The Signal Circuit Power Booster should be installed in the field in close proximity to the Notification Appliances they are powering.

WARNING

THE INSTALLING CONTRACTOR IS RESPONSIBLE FOR THE WIRING OF ALL DEVICES, THE WIRE TYPE AND THAT ALL WIRE SIZES MEET STATE AND LOCAL CODE REQUIREMENTS.
THE INSTALLING CONTRACTOR IS ALSO RESPONSIBLE THAT THE INSTALLATION IS FREE OF ALL DEFECTS.

NOTES

1. Must be grounded to a driven ground rod or the cold water pipe on the street side of the main shut off valve.
2. No AC voltage on any terminal other than those specified.
3. Maximum line resistance is 40 Ohms, maximum line capacitance is 0.5 micro-farad per loop.
4. Existing Notification Devices Device Type & Quantity Unknown.
5. Existing Initating Devices. Device type & Quantity Unknown.
6. Existing Voice Devices. Device type & Quantity Unknown.
7. To Elevator Controller, Recall Elevator To Primary Floor. Component must be installed within 3' of the controlled device.
8. To Elevator Controller, Recall Elevator To Alternate Floor. Component must be installed within 3' of the controlled device.
9. To Elevator Controller, Firemans Hat Warning Light. Component must be installed within 3' of the controlled device.
10. To Elevator Shunt Trip Breaker. Component must be installed within 3' of the controlled device.

GENERAL

1. ALL Fire Alarm Syste comply with the Natio Code, Applicable Stat and Safety Codes, a coordinated with the Having Jurisdiction.
2. CAUTION: DO NOT conn control panel (battie until all other Field and connected.
3. DO NOT install F.A.C.P. or smoke detectors in any unheated area.
4. DO NOT install any A.C. current carrying conductors close to or in the same raceway with fire alarm system conductors.
5. Dotted lines indicate factory wiring. Solid lines indicate connections to be made by the installer.
6. See Installation Manual for additional wiring instructions.
7. All relays are shown in normal supervisory condition. All relay dry contacts 28 VDC @ 1A ONLY.
8. FACP Indicating circuit outputs are 1.7 amps at 24 VDC per circuit. INX/10A circuit outputs are 2.5 amps. each. Not to exceed 10 amps total.
9. Cabinet Dimensions:

NODE 1 (BBX-FXMNS) - L 61.5000" W 20.0000" D 9.0000"
INX-10A - L 20.0000" W 14.5000" D 4.5000"
FX-LOCR - L 25.0000" W 15.0000" D 5.5000"

Reviewed for Code Compliance
Inspections Division
Approved with Conditions
Date: 06/09/15

SPECIAL FUNCTIONS

All Wiring To Be Class A.
Existing Strobes Are Not Synchronized & Will Not Be Synchronized With New Devices.

Audio Note:
Existing System is 70 VAC.
New Speaker devices are 25 VAC.
As a rule of thumb, speaker taps should be set according to strobe candella ratings.
15cd = 1/4 watt, 30cd = 1/2 watt, 75cd = 1 watt, & 110cd = 2 watts.
Individual speakers that do not have a strobe are generally set to 1/4 watt.
Ambient conditions in building may require further adjustments to meet the required decibel level.

Prepared By:
Mammoth Fire Alarms Incorporated
1-800-995-9808
Lowell, MA 01854-3126
Property Protection Monitoring Incorporated 1-877-794-3344 Lowell, MA 01854-3126 24HR UL Listed Signal Monitoring
Mammoth Fire Protection Systems Incorporated 1-877-637-3560 Lowell, MA 01854-3126 Fire Sprinkler & Clean Agent Suppression Systems

Scale: None	Approved By: Mike K 3/20/15	Drawn By: MAD
Date: 3/20/15	Revised:	

Project Info:
Maine College of Art (Basement Renovation)
522 Congress Street Portland, Me.

Prepared For:
Mancini Electric
179 Sheridan Street Portland, Me. 04101

FA-103

TYPICAL WIRING OF
B210LP DETECTOR BASES
A 4" SQUARE BOX W/WO PLASTER RING,
3 1/2" OCTAGON OR 1 GANG BOX 1 1/2" DEEP MIN.
IS REQUIRED FOR MOUNTING

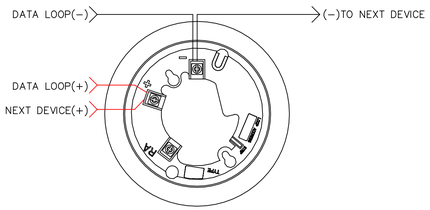

MS710ADJ
MANUAL PULL STATION

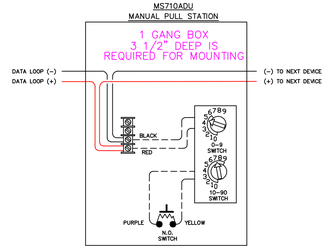

TYPICAL WIRING OF A M500R
RELAY CONTROL MODULE
CONTACT RATINGS
3 AMPS @ 30VDC
OR .3 AMPS @ 125VAC
A 4" SQUARE OR A 2 GANG BOX
3 1/2" DEEP IS REQUIRED FOR MOUNTING

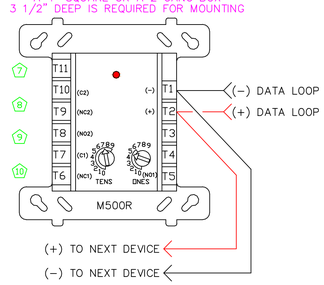

TYPICAL WIRING OF AN M500M
FOR SHUNT TRIP POWER MONITORING
A 4" SQUARE OR A 2 GANG BOX
3 1/2" DEEP IS REQUIRED FOR MOUNTING

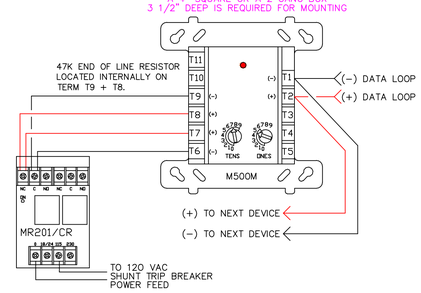

NOTICE

Ground terminal must be connected to Earth Ground per Article 760 of the National Electric Code. Failure to make a proper Earth Ground connection to a metal cold water pipe or a driven Ground Rod to this terminal will result in loss of Lightning protection, reduce the tolerance of the system to transients and will adversely affect its operation. Panel Neutral or Conduit Ground is not acceptable.
Minimum Wire Size: 12 AWG

Signal Circuit Power Boosters are supplied for additional NAC power as well as to allow the installer to use smaller gauge wire over shorter signal runs.
The Signal Circuit Power Booster should be installed in the field in close proximity to the Notification Appliances they are powering.

WARNING

THE INSTALLING CONTRACTOR IS RESPONSIBLE FOR THE WIRING OF ALL DEVICES, THE WIRE TYPE AND THAT ALL WIRE SIZES MEET STATE AND LOCAL CODE REQUIREMENTS.
THE INSTALLING CONTRACTOR IS ALSO RESPONSIBLE THAT THE INSTALLATION IS FREE OF ALL DEFECTS.

NOTES

1. Must be grounded to a driven ground rod or the cold water pipe on the street side of the main shut off valve.
2. No AC voltage on any terminal other than those specified.
3. Maximum line resistance is 40 Ohms, maximum line capacitance is 0.5 micro-farad per loop.
4. Existing Notification Devices Device Type & Quantity Unknown.
5. Existing Initating Devices. Device type & Quantity Unknown.
6. Existing Voice Devices. Device type & Quantity Unknown.
7. To Elevator Controller, Recall Elevator To Primary Floor. Component must be installed within 3' of the controlled device.
8. To Elevator Controller, Recall Elevator To Alternate Floor. Component must be installed within 3' of the controlled device.
9. To Elevator Controller, Firemans Hat Warning Light. Component must be installed within 3' of the controlled device.
10. To Elevator Shunt Trip Breaker. Component must be installed within 3' of the controlled device.

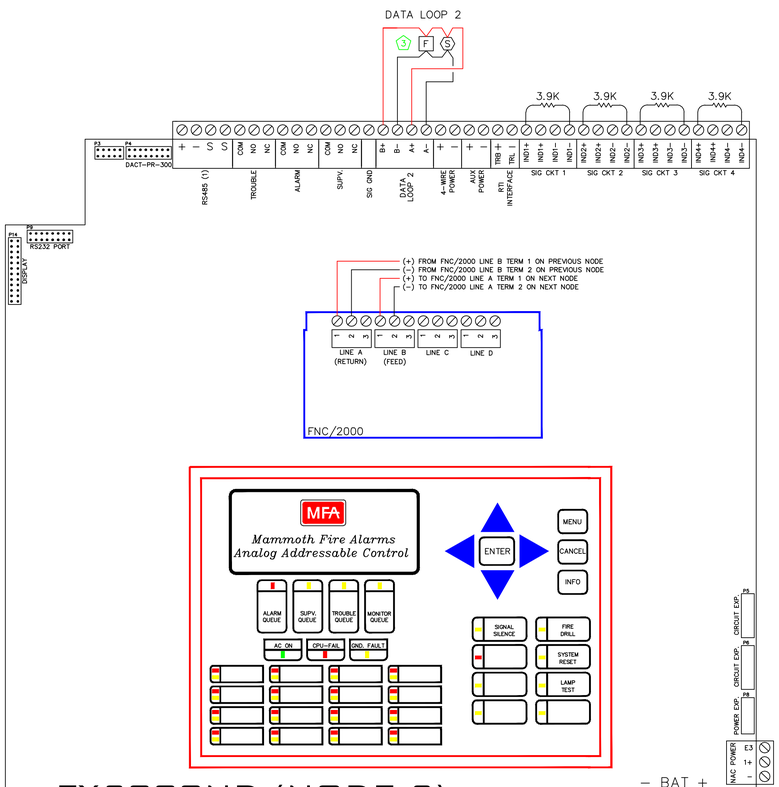

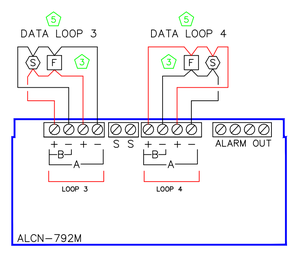

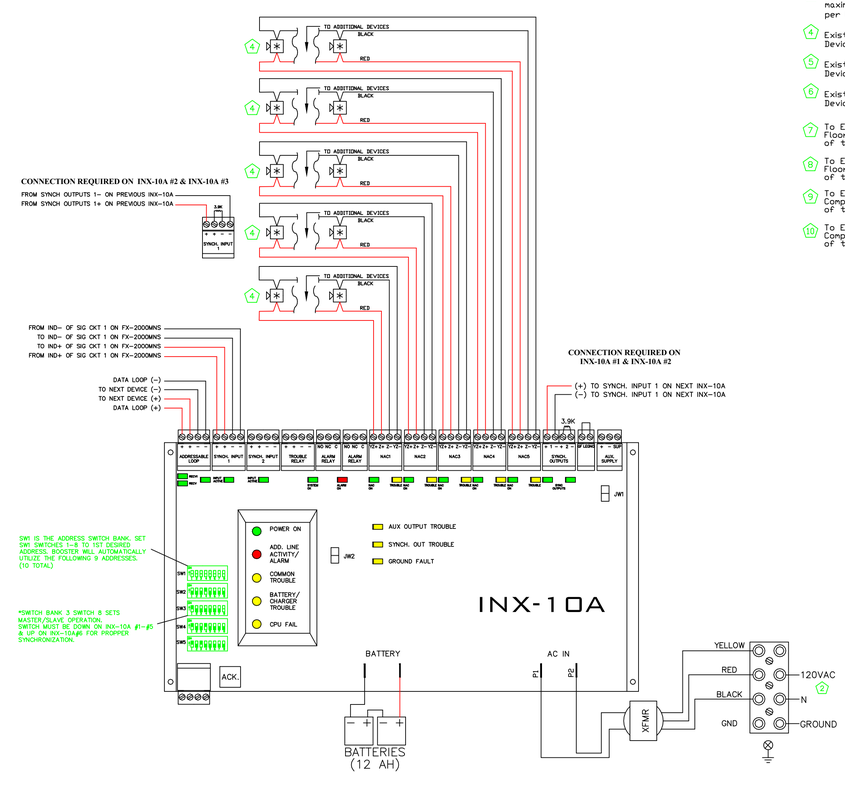

GENERAL

1. ALL Fire Alarm Syste comply with the Natic Code, Applicable Stat and Safety Codes, a coordinated with the Having Jurisdiction.
2. CAUTION DO NOT conr control panel (batte until all other Field and connected.
3. DO NOT install F.A.C.P. or smoke detectors in any unheated area.
4. DO NOT install any A.C. current carrying conductors close to or in the same raceway with fire alarm system conductors.
5. Dotted lines indicate factory wiring. Solid lines indicate connections to be made by the installer.
6. See Installation Manual for additional wiring instructions.
7. All relays are shown in normal supervisory condition. All relay dry contacts 28 VDC @ 1A ONLY.
8. FACP Indicating circuit outputs are 1.7 amps at 24 VDC per circuit. INX/10A circuit outputs are 2.5 amps. each. Not to exceed 10 amps total.
9. Cabinet Dimensions:

NODE 1 (BBX-FXMNS) − L 61.5000" W 20.0000" D 9.0000"
INX-10A − L 20.0000" W 14.5000" D 4.5000"
FX-LDCR − L 25.0000" W 15.0000" D 5.5000"

Reviewed for Code Compliance
Inspections Division
Approved with Conditions
Date: 06/09/15

SPECIAL FUNCTIONS

All Wiring To Be Class A.
Existing Strobes Are Not Synchronized & Will Not Be Synchronized With New Devices.

Audio Note:
Existing System is 70 VAC.
New Speaker devices are 25 VAC.
As a rule of thumb, speaker taps should be set according to strobe candella ratings.
15cd = 1/4 watt, 30cd = 1/2 watt, 75cd = 1 watt, & 110cd = 2 watts.
Individual speakers that do not have a strobe are generally set to 1/4 watt.
Ambient conditions in building may require further adjustments to meet the required decibel level.

Prepared By:
Mammoth Fire Alarms Incorporated
1-800-995-9808
Lowell, MA 01854-3126
PPM Property Protection Monitoring Incorporated 1-877/794-2444 Lowell, MA 01854-3126 24HR UL Listed Signal Monitoring
MFPS Mammoth Fire Protection Systems Incorporated 1-877-837-3368 Lowell, MA 01854-3126 Fire Sprinkler & Clean Agent Suppression Systems

Scale: None	Approved By:	Drawn By: MAD
Date: 3/20/15	Mike K 3/20/15	Revised:

Project Info:
Maine College of Art (Basement Renovation)
522 Congress Street Portland, Me.

Prepared For:
Mancini Electric
179 Sheridan Street Portland, Me. 04101

FA-104