LEGEND – SLC CIRCUITS AND NAC CIRCUITS

GENERAL NOTES:

A. FIRE ALARM SYSTEM WIRING SHALL COMPLY WITH THE NATIONAL ELECTRICAL CODE, APPLICABLE STATE AND LOCAL CODES, AND SHALL BE COORDINATED WITH THE LOCAL AUTHORITY HAVING JURISDICTION.
B. CAUTION: DO NOT CONNECT ANY POWER TO THE CONTROL PANEL (BATTERIES OR 120VAC) UNTIL ALL OTHER FIELD WIRING IS TESTED AND CONNECTED.
C. DO NOT INSTALL FIRE ALARM CONTROL PANEL OR SMOKE DETECTORS IN AN UNHEATED AREA.
D. DO NOT INSTALL ANY AC CURRENT–CARRYING CONDUCTORS CLOSE TO OR IN THE SAM RACEWAY WITH FIRE ALARM SYSTEM CONDUCTORS.
E. SOLID LINES REPRESENT CONNECTIONS TO BE MADE BY THE SYSTEM INSTALLER.
F. SEE MODEL MPC–7000 INSTALLATION MANUAL FOR ADDITIONALWIRINGI NSTRUCTIONS.
G. ALL RELAYS ARE SHOWN IN NORMAL SUPERVISORY CONDITION. ALL RELAYS ARE FORM "C" TYPE.

INSTALLATION NOTES

A. SMOKE DETECTORS SHALL NOT BE MOUNTED ANY CLOSER THAN 3' FROM ANYAIR DUCT OPENINGS.
B. ELEVATOR LOBBY SMOKE DETECTORS SHALL BE MOUNTED WITHIN 10' OF THE ELEVATOR DOOR
C. MANUAL PULL STATIONS SHALL BE MOUNTED PER ADA REQUIREMENTS: 48" AFF OR 42" AFF TO COMPLY WITH SIDE/FRONT REACH REQUIREMENTS.
D. WALL MOUNTED HORN/STROBES & STROBES SHALL BE MOUNTED 6" FROM CEILING, OR 96" TO 80" AFF TO THE CENTER OF STROBE.
E. HORN/STROBES & STROBES SHALL BE MOUNTED 15' FROM THE CORNER OF THE WALL. IF THIS IS NOT POSSIBLE, DEVICE SHALL BE CENTERED ON THAT WALL.
F. CEILING MOUNTED HALLWAY DEVICES SHALL BE LOCATED IN A SYMMETRICAL MANNER DOWN CENTER OF HALLWAY WHEN POSSIBLE.

(2) SEE INITIATION CIRCUITS AND NAC CIRCUITS FOR INTEGRATION OF BOTH SLC AND NAC CIRCUITS
(3) ALL CABLING IS 14/2 FOR THE NAC CIRCUITS UNLESS OTHERWISE SHOWN
(4) ALL CABLING IS 16/2 FOR THE SLC CIRCUITS UNLESS OTHERWISE SHOWN
(5)

AC = ALARM CONTROL MODULE
R – ARM = ADDRESSABLE RELAY MODULE
AV = AUDIO VISUAL DEVICE
(SET TO 75cd UNLESS NOTED OTHERWISE)
B = EXTERIOR BEACON
CO = CO DETECTOR
D = DUAL MODULE
DUCT=DUCT DETECTOR MINI MODULE
F = FLOW
FACP = MAIN FIRE PANEL
FS = FIRESMART SMOKE DETECTOR
H = HEAT DETECTOR
I = ISOLATION MODULES
T.S. = TWISTED SHIELDED
S/CO = SMOKE/CO DETECTOR (OOHC941)
RL = REMOTE LIGHT
SS = SINGLE STATION SMOKE

K = KNOX BOX
LP = LOW AIR
MM = MINI MODULE
P = PULL STATION MINI MODULE
PS = PRESSURE SWITCH
RI = REMOTE INDICATOR
S = SMOKE
SA = SMOKE WITH AUDIBLE BASE
T= TAMPER
TS = TEST SWITCH
V = VISUAL DEVICE ONLY
(SET TO 75cd UNLESS NOTED OTHERWISE)
MH = MINI HORN
RTS = REMOTE TEST MODULE
PS = PULL STATION
CL = CORRIDOR LIGHT

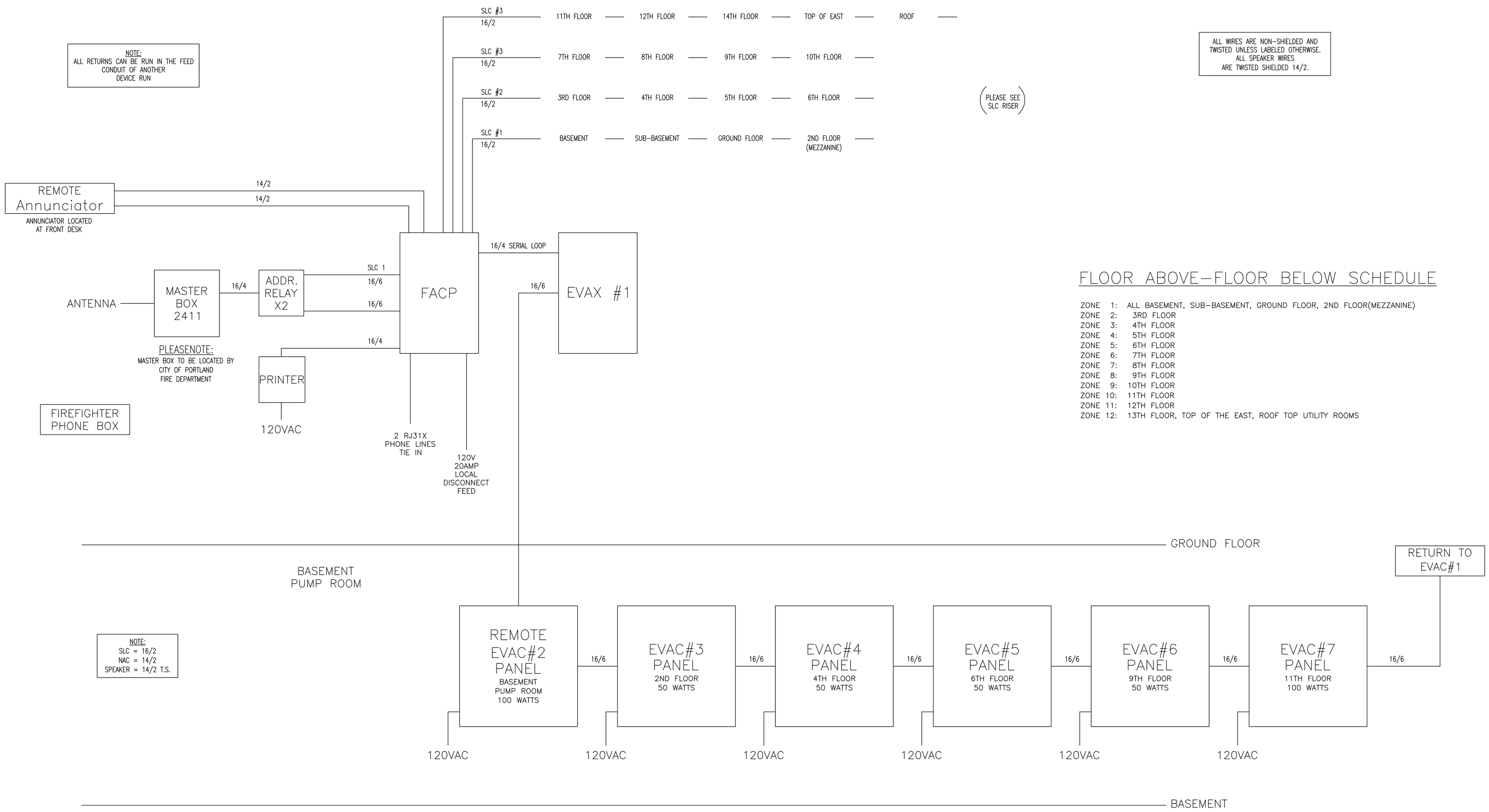

FLOOR ABOVE–FLOOR BELOW SCHEDULE

ZONE 1: ALL BASEMENT, SUB–BASEMENT, GROUND FLOOR, 2ND FLOOR(MEZZANINE)
ZONE 2: 3RD FLOOR
ZONE 3: 4TH FLOOR
ZONE 4: 5TH FLOOR
ZONE 5: 6TH FLOOR
ZONE 6: 7TH FLOOR
ZONE 7: 8TH FLOOR
ZONE 8: 9TH FLOOR
ZONE 9: 10TH FLOOR
ZONE 10: 11TH FLOOR
ZONE 11: 12TH FLOOR
ZONE 12: 13TH FLOOR, TOP OF THE EAST, ROOF TOP UTILITY ROOMS

CONSULTANT:
FIRE PROTECTION PROFESSIONALS
ALARM SYSTEMS
FIRE - SECURITY - ACCESS - CCTV
125 US ROUTE ONE
FALMOUTH, ME 04105
Phone: (207) 775–5755
Fax: (207) 781–2064

PROJECT:
Eastland Hotel
Portland, ME

DRAWING:
FIRE COMMAND CENTER GROUND FLOOR

REVISIONS

DATE: 10/02/12
SCALE: NTS
DRAWN BY: RJH
APPROVED BY: –
SHEET: 9