149-173 HIGH ST. THRU 1963 #1

1 &

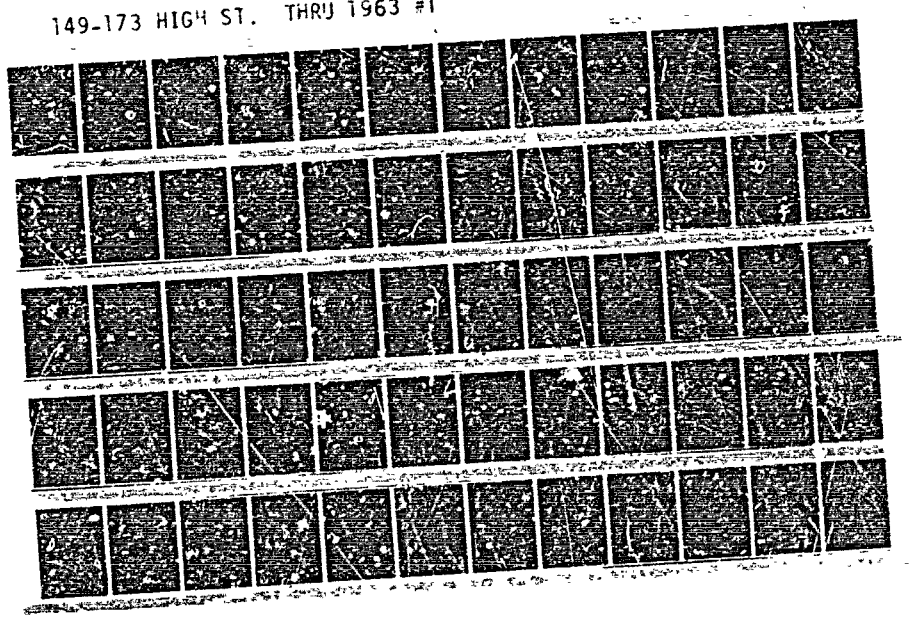

SONESTA INTERNATIONAL
HOTELS CORPORATION

Monika Schlick
Project Designer

John Hancock Tower
200 Clarendon Street, Boston, Massachusetts 02116
Telephone 617-421-5417

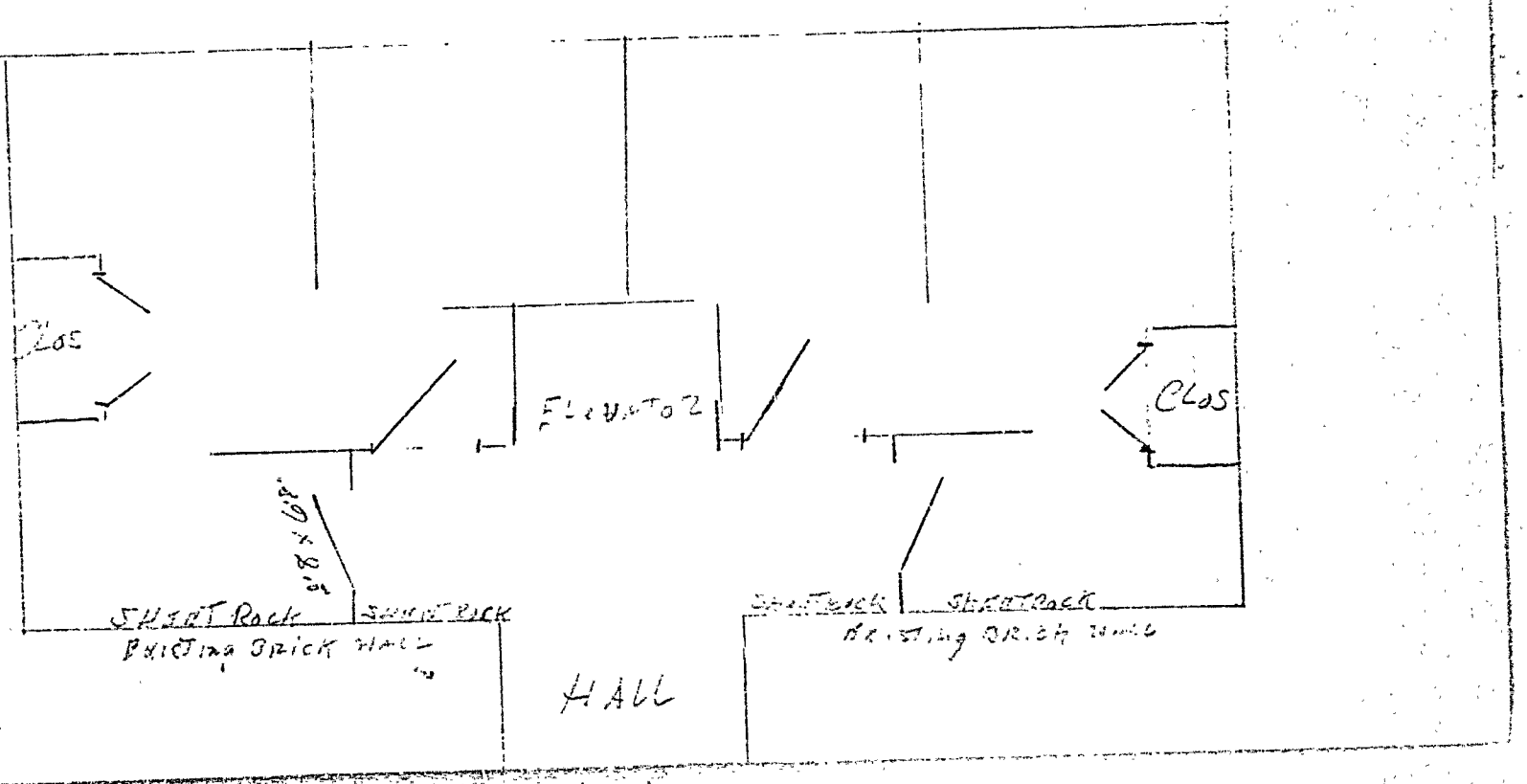

PERMIT ISSUED
JUL 5 1983
CITY of PORTLAND

APPLICATION FOR PERMIT

B.O.C.A. USE GROUP .....

B.O.C.A. TYPE OF CONSTRUCTION .....00668.....

ZONING LOCATION ..... PORTLAND, MAINE .....July 1, 1983.....

To the CHIEF OF BUILDING & INSPECTION SERVICES, PORTLAND, MAINE

The undersigned hereby applies for a permit to erect, alter, repair, demolish, move or install the following building, structure, equipment or change use in accordance with the Laws of the State of Maine, the Portland B.O.C.A. Building Code and Zoning Ordinance of the City of Portland with plans and specifications, if any, submitted herewith and the following specifications:

LOCATION .....157 High Street - tower area..... Fire District #1 ☐, #2 ☐

1. Owner's name and address Eastland Hotel - same ..... Telephone ...775-5411..
2. Lessee's name and address ..... Telephone .....
3. Contractor's name and address Sonesta Int'l Hotel Corp.-200 Clarendon St Telephone ...775-5411..
   ..... Boston, Mass..... No. of sheets .....

Proposed use of building - hotel ..... No. families .....

Last use ..... same ..... No. families .....

Material ..... No. stories ..... Heat ..... Style of roof .... Roofing .....

Other buildings on same lot .....

Estimated contractural cost $...40,000....

FIELD INSPECTOR—Mr. .....
@ 775-5451

Appeal Fees	$ .....
Base Fee	..210.00.....
Late Fee	.....
TOTAL	$ ..210.00.....

To remove doors and to replace with smaller size, also to sheetrock walls as per plans. 1 sheet of plans.

Stamp of Special Conditions

send permit to # 1 C/O ~~Maxxi~~ Maurice St. Peter

NOTE TO APPLICANT: Separate permits are required by the installers and subcontractors of heating, plumbing, electrical and mechanicals.

DETAILS OF NEW WORK

Is any plumbing involved in this work? ....no..... Is any electrical work involved in this work? .....no

Is connection to be made to public sewer? ..... If not, what is proposed for sewage? .....

Has septic tank notice been sent? ..... Form notice sent? .....

Height average grade to top of plate ..... Height average grade to highest point of roof .....

Size, front ..... depth ..... No. stories ..... solid or filled land? ..... earth or rock? .....

Material of foundation ..... Thickness, top ..... bottom ..... cellar .....

Kind of roof ..... Rise per foot ..... Roof covering .....

No. of chimneys ..... Material of chimneys ..... of lining ..... Kind of heat ..... fuel .....

Framing Lumber—Kind ..... Dressed or full size? ..... Corner posts ..... Sills .....

Size Girder ..... Columns under girders ..... Size ..... Max. on centers .....

Studs (outside walls and carrying partitions) 2x4-16" O. C. Bridging in every floor and flat roof span over 8 feet.

Joists and rafters:	1st floor	2nd	3rd	roof .....
On centers:	1st floor	2nd	3rd	roof .....
Maximum span:	1st floor	2nd	3rd	roof .....

If one story building with masonry walls, thickness of walls? ..... height? .....

IF A GARAGE

No. cars now accommodated on same lot ....., to be accommodated ..... number commercial cars to be accommodated .....

Will automobile repairing be done other than minor repairs to cars habitually stored in the proposed building? .....

APPROVALS BY: *DATE*

BUILDING INSPECTION—PLAN EXAMINER .....

ZONING: .....

BUILDING CODE: .....

Fire Dept.: .....

Health Dept.: .....

Others: .....

MISCELLANEOUS

Will work require disturbing of any tree on a public street? ...no

Will there be in charge of the above work a person competent to see that the State and City requirements pertaining thereto are observed? ...yes

Signature of Applicant Maurice St. Peter ..... Phone # ....same.....

Type Name of above ....Maurice St. Peter for Sonesta Int'l Hotels Corp. ..... 1☒ 2☐ 3☐ 4☐

Other .....

and Address .....

FIELD INSPECTOR'S COPY APPLICANT'S COPY OFFICE FILE COPY

[3] Ms Schmuckal

Permit No. 83/668

Location 157 High St.

Owner Carstand Hotel

Date of permit 7-1-83

Approved 7-5-83

Dwelling

Garage

Alteration to hotel

NOTES

3-7-84 Work completed

912533

Permit # _____ City of Portland _____ BUILDING PERMIT APPLICATION Fee $100.00 Zone _____ Map # _____ Lot# _____

Please fill out any part which applies to job. Proper plans must accompany form.

PERMIT ISSUED
MAY - 2 1991
CITY OF PORTLAND

Owner: ITL-SON, INC. Phone # 407-869-9221 Florida

Address: 149-159 High Street, Portland, ME

LOCATION OF CONSTRUCTION 149-159 High Street

Contractor: N.E.S.A. Sub.: _____

Address: 56 Warren Ave., Portland, ME 04103 Phone # 878-8844 Steve Reina

Est. Construction Cost $16,000.00 Proposed Use: Hotel

Past Use: same

# of Existing Res. Units _____ # of New Res. Units _____

Building Dimensions L _____ W _____ Total Sq. Ft. _____

Stories: _____ # Bedrooms _____ Lot Size: _____

Is Proposed Use: Seasonal _____ Condominium _____ Conversion _____

Explain Conversion Replace existing awnings with new, same size, as per plans. 1 set of plans, Cert. of Flame.

For Official Use Only

Date March 4, 1991 Subdivision: Name _____

Inside Fire Limits _____ Lot _____

Bldg Code _____ Ownership _____

Time Limit _____

Estimated Cost $16,000.00

Zoning: B-3 Zone

Street Frontage Provided: _____

Provided Setbacks: Front _____ Back _____ Side _____ Side _____

Review Required:

Zoning Board Approval: Yes ____ No ____ Date: _____

Planning Board Approval: Yes ____ No ____ Date: _____

Conditional Use: _____ Variance _____ Site Plan _____ Subdivision _____

Shoreland Zoning Yes ____ No ____ Floodplain Yes ____ No ____

Special Exception _____

Other _____ (Explain) _____

OK WJ 3-7-91

Foundation:

1. Type of Soil: _____
2. Set Backs - Front _____ Rear _____ Side(s) _____
3. Footings Size: _____
4. Foundation Size: _____
5. Other _____

Floor:

1. Sills Size: _____ Sills must be anchored.
2. Girder Size: _____
3. Lally Column Spacing: _____ Size: _____
4. Joists Size: _____ Spacing 16" O.C.
5. Bridging Type: _____ Size: _____
6. Floor Sheathing Type: _____ Size: _____
7. Other Material: _____

Exterior Walls:

1. Studding Size _____ Spacing _____
2. No. windows _____
3. No. Doors _____
4. Header Sizes _____ Span(s) _____
5. Bracing: Yes _____ No. _____
6. Corner Posts Size _____
7. Insulation Type _____ Size _____
8. Sheathing Type _____ Size _____
9. Siding Type _____ Weather Exposure _____
10. Masonry Materials _____
11. Metal Materials _____

Interior Walls:

1. Studding Size _____ Spacing _____
2. Header Sizes _____ Span(s) _____
3. Wall Covering Type _____
4. Fire Wall if required _____
5. Other Materials _____

Ceiling:

1. Ceiling Joists Size: _____
2. Ceiling Strapping Size _____ Spacing _____
3. Type Ceilings: _____
4. Insulation Type _____ Size _____
5. Ceiling Height: _____

Roof:

1. Truss or Rafter Size _____ Span _____
2. Sheathing Type _____ Size _____
3. Roof Covering Type _____

HISTORIC PRESERVATION

~~Not in District nor Landmark.~~

~~Does not require review.~~

~~Requires Review.~~

Action: ____ Approved. ____ Approved with Conditions. ____ Denied.

Date: 3-13-91 / 4-26-91 (AWEA)

Signature: D Alexander

Chimneys:

Type: _____ Number of Fire Places _____

Heating:

Type of Heat: _____

Electrical:

Service Entrance Size: _____ Smoke Detector Required Yes ____ No ____

Plumbing:

1. Approval of soil test if required Yes _____ No _____
2. No. of Tubs or Showers _____
3. No. of Flushes _____
4. No. of Lavatories _____
5. No. of Other Fixtures _____

Swimming Pools:

1. Type: _____
2. Pool Size: _____ x _____ Square Footage _____
3. Must conform to National Electrical Code and State Law.

Permit Received By Joyce M. Rinaldi (For Owner)

Signature of Applicant Stephen Reina (Cont.) Date 3/4/91
Steve Reina

Signature of CEO _____ Date _____

Inspection Dates _____

White-Tax Assesor Yellow-GPCOG White Tag -CEO

912533

Permit # _____ **City of** Portland **BUILDING PERMIT APPLICATION** Fee $100.00 **Zone** _____ **Map #** _____ **Lot#** _____

Please fill out any part which applies to job. Proper plans must accompany form.

Owner: FM-SON, INC. Phone # 407-869-9221-[illegible] Florida

Address: 149-159 High Street, Portland, ME

LOCATION OF CONSTRUCTION: 149-159 High Street

Contractor: NEW S.A. Sub.:

Address: 56 Warren Ave., Portland, ME 04103 Phone # 878-8844 Steve Reina

Est. Construction Cost: $16,000.00 Proposed Use: Hotel

Past Use: same

# of Existing Res. Units _____ # of New Res. Units _____

Building Dimensions L _____ W _____ Total Sq. Ft. _____

Stories: _____ # Bedrooms _____ Lot Size: _____

Proposed Use: Seasonal _____ Condominium _____ Conversion _____

Explain Conversion: Replace existing awnings with new, same size, as per plans. 1 set of plans, Cert. of Plans.

For Official Use Only

Date: March 4, 1991 Subdivision:

Inside Fire Limits: Name:

Bldg Code: Lot:

Time Limit: Ownership: Public:

Estimated Cost: $16,000.00

PERMIT ISSUED

MAR - 7 1991

CITY OF PORTLAND

Zoning:

Street Frontage Provided:

Provided Setbacks: Front _____ Back _____ Side _____ Side _____

Review Required:

Zoning Board Approval: Yes ____ No ____ Date:

Planning Board Approval: Yes ____ No ____ Date:

Conditional Use: _____ Variance _____ Site Plan _____ Subdivision _____

Shoreland Zoning Yes ____ No ____ Floodplain Yes ____ No ____

Special Exception

Other _____ (Explain)

HISTORIC PRESERVATION

Not in District nor Landmark.

Does not require review.

Requires Review.

Foundation:

1. Type of Soil:
2. Set Backs - Front _____ Rear _____ Side(s) _____
3. Footings Size:
4. Foundation Size:
5. Other

Floor:

1. Sills Size: _____ Sills must be anchored.
2. Girder Size:
3. Lally Column Spacing: _____ Size:
4. Joists Size: _____ Spacing 16" O.C.
5. Bridging Type: _____ Size:
6. Floor Sheathing Type: _____ Size:
7. Other Material:

Exterior Walls:

1. Studding Size _____ Spacing
2. No. windows
3. No. Doors
4. Header Sizes _____ Span(s)
5. Bracing: Yes _____ No.
6. Corner Posts Size
7. Insulation Type _____ Size
8. Sheathing Type _____ Size
9. Siding Type _____ Weather Exposure
10. Masonry Materials
11. Metal Materials

Interior Walls:

1. Studding Size _____ Spacing
2. Header Sizes _____ Span(s)
3. Wall Covering Type
4. Fire Wall if required
5. Other Materials

Ceiling:

1. Ceiling Joists Size:
2. Ceiling Strapping Size _____ Spacing
3. Type Ceilings:
4. Insulation Type _____ Size
5. Ceiling Height:

Roof:

1. Truss or Rafter Size _____ Span
2. Sheathing Type _____ Size
3. Roof Covering Type

Action: ___ Approved. ___ Approved with Conditions ___ Denied.

Date: 3-12-91 / 4-26-91

Signature: [illegible]

Chimneys:

Type: _____ Number of Fire Places

Heating:

Type of Heat:

Electrical:

Service Entrance Size: _____ Smoke Detector Required Yes ____ No ____

Plumbing:

1. Approval of soil test if required Yes _____ No _____
2. No. of Tubs or Showers
3. No. of Flushes
4. No. of Lavatories
5. No. of Other Fixtures

Swimming Pools:

1. Type:
2. Pool Size: _____ x _____ Square Footage
3. Must conform to National Electrical Code and State Law.

Permit Received By: Joyce M. Rinaldi

Signature of Applicant: Steve Reina (CONT. (FEE OWNER) Date: 3/4/91

Signature of CEO _____ Date _____

Inspection Dates

White-Tax Assesor Yellow-GPCOG White Tag -CEO

(10) Mitchell

PLOT PLAN

N

FEES (Breakdown From Front)

Base Fee $100.00
Subdivision Fee $
Site Plan Review Fee $
Other Fees $
(Explain)
Late Fee $

Inspection Record

Type	Date
	/ /
	/ /
	/ /
	/ /
	/ /
	/ /

COMMENTS

Signature of Applicant Stephen Rainer, CONTRACTOR Date (FOR OWNER) 3-4-91

City of Portland
Department of Planning and Urban Development
Room 211 City Hall, 389 Congress Street
Portland, Maine 04101 207-874-8300

HISTORIC PRESERVATION
CERTIFICATE OF APPROPRIATENESS

Pursuant to review under the City of Portland's Historic Preservation Ordinance (Chapter 14, Article IX of the Portland City Code), the following work on the specified property is hereby:

X granted a Certificate of Approriateness, with conditions as indicated.
___ denied a Certificate of Appropriateness.

Historic Resource Inventory Number:_____ Assessor's Chart/Block/Lot: 46-E-11

Property Address: 157 High Street, Sonesta Hotel

Applicant: (name) Mr. Stephen Reina, NESA
(address) 56 Warren Avenue
Portland, ME 04103

Proposed Work (continue on back if necessary): Installation of 14 awnings and one re-cover at the Sonesta Hotel per staff memo dated 3-8-91 and application, as conditioned below.

Conditions of Approval (continue on back if necessary):

1. The awnings shall be similar in material to material previously approved for the Pagoda Restaurant (a non-plastic appearing material comparable to "Sunbrella"), subject to City staff approval.
2. The entrance awning at the main hotel entry shall not extend above the sills of the window above, nor be lowered below the existing materials.
3. Lighting, to occur only at the two building entrances, shall illuminate lettering and sidewalk below, and not result in the effect of a glowing awning. (continued on back

Reasons for Denial (continue on back if necessary):

All improvements shall be carried out as shown on the plans and specifications as submitted by the applicant, except as modified to comply with the conditions of approval described above. Changes to the approved plans and specifications and any additional work which may be undertaken must be reviewed and approved by this office prior to construction, alteration or demolition. If, during the course of completing the approved work, conditions are encountered which prevent completing the approved work or which require additional or alternative work, you must apply for and receive a Certificate of Appropriateness or Non-Applicability PRIOR to undertaking additional or alternative work.

This Certificate is granted upon condition that the work authorized herein is commenced within twelve (12) months after the date of issuance. If the work authorized by this Certificate is not commenced within twelve (12) months after the date of issuance or if such work is suspended in significant part for a period of one year after the time the work is commenced, such Certificate shall expire and be of no further effect; provided that, for cause, one or more extensions of time for periods not exceeding ninety (90) days each may be allowed in writing by the Department.

4/30/91
Date

Director of Planning and Urban Development

Staff Recommendation:
___ Additional information Requested (date:_____ rec'd:_____)
___ Approve. ___ Approve w/ conditions. ___ Deny. X No Recommendation. Date: 3-8-91
Conditions: _____

Historic Preservation Committee Recommendation/Decision:
Required: X Yes ___ No
___ Approve. X Approve w/ conditions. ___ Deny. Vote: 5-2, Barba and Kuniholm 3-13-91
Conditions: See other side.

Planning Board Decision:
Required: ___ Yes X No
___ Approve. ___ Approve w/ conditions. ___ Deny. Vote:_____
Conditions: _____

City Council Decision (Project of Special Merit):
___ Approve. ___ Approve w/ conditions. ___ Deny. Vote:_____
Conditions:
___ 1. Developer demonstrate binding financial commitments, performance guarantees, penal bond.
___ 2. Developer provide full documentation of the resource, provide suitable monument.
___ 3. Other:_____

Conditions continued

4. The attachment of new awnings shall utilize existing holes wherever possible. Holes not used should be repaired with in-kind material (not Portland Cement). The Committee recommends that all existing and un-used holes be suitably patched.

City of Portland
Department of Planning and Urban Development
Room 211 City Hall, 389 Congress Street
Portland, Maine 04101 207-874-8300

Form 6.1.88

HISTORIC PRESERVATION
CERTIFICATE OF APPROPRIATENESS

Pursuant to review under the City of Portland's Historic Preservation Ordinance (Chapter 14, Article IX of the Portland City Code), the following work on the specified property is hereby:

_X_ granted a Certificate of Approriateness, with conditions as indicated.
___ denied a Certificate of Appropriateness.

Historic Resource Inventory Number:_____ Assessor's Chart/Block/Lot: 46-E-11

Property Address: 157 High Street, Sonesta Hotel

Applicant: (name) Mr. Stephen Reina, NESA
(address) 56 Warren Avenue
Portland, ME 04103

Proposed Work (continue on back if necessary): Installation of 14 awnings and one re-cover at the Sonesta Hotel per staff memo dated 3-8-91 and application, as conditioned below.

Conditions of Approval (continue on back if necessary):

1. The awnings shall be similar in material to material previously approved for the Pagoda Restaurant (a non-plastic appearing material comparable to "Sunbrella"), subject to City staff approval.
2. The entrance awning at the main hotel entry shall not extend above the sills of the window above, nor be lowered below the existing materials.
3. Lighting, to occur only at the two building entrances, shall illuminate lettering and sidewalk below, and not result in the effect of a glowing awning. (continued on back)

Reasons for Denial (continue on back if necessary):

All improvements shall be carried out as shown on the plans and specifications as submitted by the applicant, except as modified to comply with the conditions of approval described above. Changes to the approved plans and specifications and any additional work which may be undertaken must be reviewed and approved by this office prior to construction, alteration or demolition. If, during the course of completing the approved work, conditions are encountered which prevent completing the approved work or which require additional or alternative work, you must apply for and receive a Certificate of Appropriateness or Non-Applicability PRIOR to undertaking additional or alternative work.

This Certificate is granted upon condition that the work authorized herein is commenced within twelve (12) months after the date of issuance. If the work authorized by this Certificate is not commenced within twelve (12) months after the date of issuance or if such work is suspended in significant part for a period of one year after the time the work is commenced, such Certificate shall expire and be of no further effect; provided that, for cause, one or more extensions of time for periods not exceeding ninety (90) days each may be allowed in writing by the Department.

4/30/91
Date

Director of Planning and Urban Development

.....

Staff Recommendation:
___ Additional information Requested (date:_____ rec'd:_____)
___ Approve. ___ Approve w/ conditions. ___ Deny. X No Recommendation. Date: 3-8-91
Conditions: _____

Historic Preservation Committee Recommendation/Decision:
Required: X Yes ___ No
___ Approve. X Approve w/ conditions. ___ Deny. Vote: 5-2, Barba and Kuniholm 3-13-91
Conditions: See other side.

Planning Board Decision:
Required: ___ Yes X No
___ Approve. ___ Approve w/ conditions. ___ Deny. Vote:_____
Conditions: _____

City Council Decision (Project of Special Merit):
___ Approve. ___ Approve w/ conditions. ___ Deny. Vote:_____
Conditions:
___ 1. Developer demonstrate binding financial commitments, performance guarantees, penal bond.
___ 2. Developer provide full documentation of the resource, provide suitable monument.
___ 3. Other:_____

Conditions continued

4. The attachment of new awnings shall utilize existing holes wherever possible. Holes not used should be repaired with in-kind material (not Portland Cement). The Committee recommends that all existing and un-used holes be suitably patched.

City of Portland
Department of Planning and Urban Development
Room 211 City Hall, 389 Congress Street
Portland, Maine 04101 207-374-8300

HISTORIC PRESERVATION
CERTIFICATE OF APPROPRIATENESS

Pursuant to review under the City of Portland's Historic Preservation Ordinance (Chapter 14, Article IX of the Portland City Code), the following work on the specified property is hereby:

X granted a Certificate of Appropriateness, with conditions as indicated.
___ denied a Certificate of Appropriateness.

Historic Resource Inventory Number: _____ Assessor's Chart/Block/Lot: 46-E-11

Property Address: 159 High Street, Sonesta Hotel

Applicant: (name) Stephen Reina, NESA
(address) 56 Warren Avenue
Portland, ME 04103

Proposed Work (continue on back if necessary): Amendment to previously approved awning -- per staff memorandum 4-19-91.

Conditions of Approval (continue on back if necessary): Illumination will be of reasonable intensity and shielded to prevent glare or spillover.

Reasons for Denial (continue on back if necessary): _____

All improvements shall be carried out as shown on the plans and specifications as submitted by the applicant, except as modified to comply with the conditions of approval described above. Changes to the approved plans and specifications and any additional work which may be undertaken must be reviewed and approved by this office prior to construction, alteration or demolition. If, during the course of completing the approved work, conditions are encountered which prevent completing the approved work or which require additional or alternative work, you must apply for and receive a Certificate of Appropriateness or Non-Applicability PRIOR to undertaking additional or alternative work.

APPLICATION FOR PERMIT

DEPARTMENT OF BUILDING INSPECTIONS SERVICES
ELECTRICAL INSTALLATIONS

Date February 15, 1989, 19
Receipt and Permit number 00044

To the CHIEF ELECTRICAL INSPECTOR, *Portland, Maine:*

The undersigned hereby applies for a permit to make electrical installations in accordance with the laws of Maine, the Portland Electrical Ordinance, the National Electrical Code and the following specifications:

LOCATION OF WORK: 157 High St.
OWNER'S NAME: ~~First Winthrop Corp.~~ ADDRESS:

		FEES
OUTLETS:		
Receptacles ____ Switches ____ Plugmold ____ ft. TOTAL 60		5.00
FIXTURES: (number of)		
Incandescent XX Flourescent ____ (not strip) TOTAL 76		XXXX 9.60
Strip Flourescent ____ ft.		
SERVICES:		
Overhead ____ Underground ____ Temporary ____ TOTAL amperes ____		
METERS: (number of) ____		
MOTORS: (number of)		
Fractional ____		
1 HP or over ____		
RESIDENTIAL HEATING:		
Oil or Gas (number of units) ____		
Electric (number of rooms) ____		
COMMERCIAL OR INDUSTRIAL HEATING:		
Oil or Gas (by a main boiler) ____		
Oil or Gas (by separate units) ____		
Electric Under 20 kws ____ Over 20 kws ____		
APPLIANCES: (number of)		
Ranges ____ Water Heaters ____		
Cook Tops ____ Disposals ____		
Wall Ovens ____ Dishwashers ____		
Dryers ____ Compactors ____		
Fans ____ Others (denote) ____		
TOTAL ____		
MISCELLANEOUS: (number of)		
Branch Panels 1		
Transformers 1		1.00
Air Conditioners Central Unit 1		2.00
Separate Units (windows) ____		5.00
Signs 20 sq. ft. and under ____		
Over 20 sq. ft. ____		
Swimming Pools Above Ground ____		
In Ground ____		
Fire/Burglar Alarms Residential ____		
Commercial ____		
Heavy Duty Outlets, 220 Volt (such as welders) 30 amps and under 10		10.00
over 30 amps ____		
Circus, Fairs, etc. ____		
Alterations to wires ____		
Repairs after fire ____		
Emergency Lights, battery 3		1.50
Emergency Generators ____		
	INSTALLATION FEE DUE:	
FOR ADDITIONAL WORK NOT ON ORIGINAL PERMIT	DOUBLE FEE DUE:	
FOR REMOVAL OF A "STOP ORDER" (304-16.b)		
	TOTAL AMOUNT DUE:	34.10

INSPECTION:
Will be ready on ____, 19__; or Will Call XX

CONTRACTOR'S NAME: Anthony Mancini
ADDRESS: 179 Sheridan Street
TEL.: 774-5829
MASTER LICENSE NO.: 2436
LIMITED LICENSE NO.:

SIGNATURE OF CONTRACTOR: Gino Marconi

INSPECTOR'S COPY WHITE

ELECTRICAL INSTALLATIONS

Permit Number 00042

Location 157 High St

Owner 157 Wheeler Corporation

Date of Permit 2/15/69

Final Inspection

By Inspector

Permit Application Register Page No. 56

INSPECTIONS: Service by

Service called in

Clov'ng-in 2/27/87 by

PROGRESS INSPECTIONS:

REMARKS:

APPLICATION FOR PERMIT

DEPARTMENT OF BUILDING INSPECTIONS SERVICES

ELECTRICAL INSTALLATIONS

Date April 20, 1988
Receipt and Permit number 2 90 KK

To the CHIEF ELECTRICAL INSPECTOR, *Portland, Maine:*

The undersigned hereby applies for a permit to make electrical installations in accordance with the laws of Maine, the Portland Electrical Ordinance, the National Electrical Code and the following specifications:

LOCATION OF WORK: 157 High Street - 9th Fl.

OWNER'S NAME: Senesta Hotel ADDRESS: same

	FEES
OUTLETS:	
Receptacles x Switches x Plugmold ____ ft. TOTAL 1-30	3.00
FIXTURES: (number of)	
Incandescent 2 Flourescent x (not strip) TOTAL 12	3.20
Strip Flourescent ____ ft.	
SERVICES:	
Overhead x Underground ____ Temporary ____ TOTAL amperes 300	6.00
METERS: (number of) 1	.50
MOTORS: (number of)	
Fractional ____	
1 HP or over ____	
RESIDENTIAL HEATING:	
Oil or Gas (number of units) ____	
Electric (number of rooms) ____	
COMMERCIAL OR INDUSTRIAL HEATING:	
Oil or Gas (by a main boiler) ____	
Oil or Gas (by separate units) ____	
Electric Under 20 kws ____ Over 20 kws x	10.00
APPLIANCES: (number of)	
Ranges ____ Water Heaters ____	
Cook Tops ____ Disposals ____	
Wall Ovens ____ Dishwashers ____	
Dryers ____ Compactors ____	
Fans ____ Others (denote) ____	
TOTAL ____	
MISCELLANEOUS: (number of)	
Branch Panels ____	
Transformers ____	
Air Conditioners Central Unit ____	
Separate Units (windows) ____	
Signs 20 sq. ft. and under ____	
Over 20 sq. ft. ____	
Swimming Pools Above Ground ____	
In Ground ____	
Fire/Burglar Alarms Residential ____	
Commercial ____	
Heavy Duty Outlets, 220 Volt (such as welders) 30 amps and under ____	
over 30 amps ____	
Circus, Fairs, etc. ____	
Alterations to wires ____	
Repairs after fire ____	
Emergency Lights, battery ____	
Emergency Generators ____	
INSTALLATION FEE DUE:	
FOR ADDITIONAL WORK NOT ON ORIGINAL PERMIT ..... DOUBLE FEE DUE:	
FOR REMOVAL OF A "STOP ORDER" (304-16.b)	
TOTAL AMOUNT DUE:	22.70

INSPECTION:

Will be ready on ____, 19__; or Will Call x

CONTRACTOR'S NAME: Russell R. Dionne

ADDRESS: 152 Lewiston Rd., Gray, ME 04039

TEL.: 657-3621

MASTER LICENSE NO.: 04371 SIGNATURE OF CONTRACTOR:

LIMITED LICENSE NO.: ____

INSPECTOR'S COPY — WHITE

ELECTRICAL INSTALLATIONS —

Permit Number 29094

Location 157 High St

Owner Lorraine Hall

Date of Permit 4/20/88

Final Inspection

By Inspector D. Gilmer

Permit Application Register Page No. 29

INSPECTIONS: Service disconnect & Panel by Russo

Service called in Metro / 5/23/88

Closing-in _____ by _____

PROGRESS INSPECTIONS: _____ / _____ / _____

_____ / _____ / _____

_____ / _____ / _____

_____ / _____ / _____

_____ / _____ / _____

_____ / _____ / _____

DATE:	REMARKS:

CODE COMPLIANCE COMPLETED
DATE _____

This Certificate is granted upon condition that the work authorized herein is commenced within twelve (12) months after the date of issuance. If the work authorized by this Certificate is not commenced within twelve (12) months after the date of issuance or if such work is suspended in significant part for a period of one year after the time the work is commenced, such Certificate shall expire and be of no further effect; provided that, for cause, one or more extensions of time for periods not exceeding ninety (90) days each may be allowed in writing by the Department.

4/29/91
Date

Director of Planning and Urban Development

****

Staff Recommendation:
___ Additional Information Requested (date:_____ rec'd:_____)
___ Approve. ___ Approve w/ conditions. ___ Deny. _X_ No Recommendation. Date: 4-19-91
Conditions: _____

Historic Preservation Committee Recommendation/Decision:
Required: _X_ Yes ___ No
___ Approve. _X_ Approve w/ conditions. ___ Deny. Vote: 6-0-1 (Kuniholm abstaining)
Conditions: See other side. 4-24-91

Planning Board Decision:
Required: ___ Yes _X_ No
___ Approve. ___ Approve w/ conditions. ___ Deny. Vote:_____
Conditions: _____

City Council Decision (Project of Special Merit):
___ Approve. ___ Approve w/ conditions. ___ Deny. Vote:_____
Conditions:
___ 1. Developer demonstrate binding financial commitments, performance guarantees, penal bond.
___ 2. Developer provide full documentation of the resource, provide suitable monument.
___ 3. Other:_____

City of Portland
Department of Planning and Urban Development
Room 211 City Hall, 389 Congress Street
Portland, Maine 04101 207-874-8300

Form 6.1.88

HISTORIC PRESERVATION
CERTIFICATE OF APPROPRIATENESS

Pursuant to review under the City of Portland's Historic Preservation Ordinance (Chapter 14, Article IX of the Portland City Code), the following work on the specified property is hereby:

_X_ **granted** a Certificate of Approriateness, with conditions as indicated.
___ **denied** a Certificate of Appropriateness.

Historic Resource Inventory Number:_____ Assessor's Chart/Block/Lot: 46-E-11

Property Address: 159 High Street, Sonesta Hotel

Applicant: (name) Stephen Reina, NESA
(address) 56 Warren Avenue
Portland, ME 04103

Proposed Work (continue on back if necessary): Amendment to previously approved awning -- per staff memorandum 4-19-91.

Conditions of Approval (continue on back if necessary): Illuminati[illegible] of reasonable intensity and shielded to prevent glare or spillover.

Reasons for Denial (continue on back if necessary):

All improvements shall be carried out as shown on the plans and specifications as submitted by the applicant, except as modified to comply with the conditions of approval described above. Changes to the approved plans and specifications and any additional work which may be undertaken must be reviewed and approved by this office prior to construction, alteration or demolition. If, during the course of completing the approved work, conditions are encountered which prevent completing the approved work or which require additional or alternative work, you must apply for and receive a Certificate of Appropriateness or Non-Applicability PRIOR to undertaking additional or alternative work.

This Certificate is granted upon condition that the work authorized herein is commenced within twelve (12) months after the date of issuance. If the work authorized by this Certificate is not commenced within twelve (12) months after the date of issuance or if such work is suspended in significant part for a period of one year after the time the work is commenced, such Certificate shall expire and be of no further effect; provided that, for cause, one or more extensions of time for periods not exceeding ninety (90) days each may be allowed in writing by the Department.

4/29/91
Date

Director of Planning and Urban Development

****

Staff Recommendation:
___ Additional information Requested (date:_____ rec'd:_____)
___ Approve. ___ Approve w/ conditions. ___ Deny. X No Recommendation. Date: 4-19-91
Conditions: _____

Historic Preservation Committee Recommendation/Decision:
Required: X Yes ___ No
___ Approve. X Approve w/ conditions. ___ Deny. Vote: 6-0-1 (Kunjholm abstaining)
Conditions: See other side. 4-24-91

Planning Board Decision:
Required: ___ Yes X No
___ Approve. ___ Approve w/ conditions. ___ Deny. Vote:_____
Conditions: _____

City Council Decision (Project of Special Merit):
___ Approve. ___ Approve w/ conditions. ___ Deny. Vote:_____
Conditions:
___ 1. Developer demonstrate binding financial commitments, performance guarantees, penal bond.
___ 2. Developer provide full documentation of the resource, provide suitable monument.
___ 3. Other:_____

DEPARTMENT OF PLANNING & URBAN DEVELOPMENT

Billing for Legal
Ads for Agenda's

Project Name: Amendment to Previous Awning Approval, Sonesta Hotel

Owner's Name: Stephen Reina, NESA, applicant

Address of Project: 157 High Street

Division/Board: Historic Preservation Committee

Number of ~~Residential~~ Notices Mailed Out: 14

% Amount of Legal Ad: $14.08

.40 X number of notices: $ 5.60

Total Amount Due: $19.68

Make checks payable to the City of Portland, Attn. D. Marquis, Rm. 315, 389 Congress Street, Portland, Maine 04101.

Bill to: Stephen Reina, NESA
56 Warren Avenue
Portland, ME 04103

mailed: _____

PAYMENT DUE AT
ISSUANCE OF PERMIT

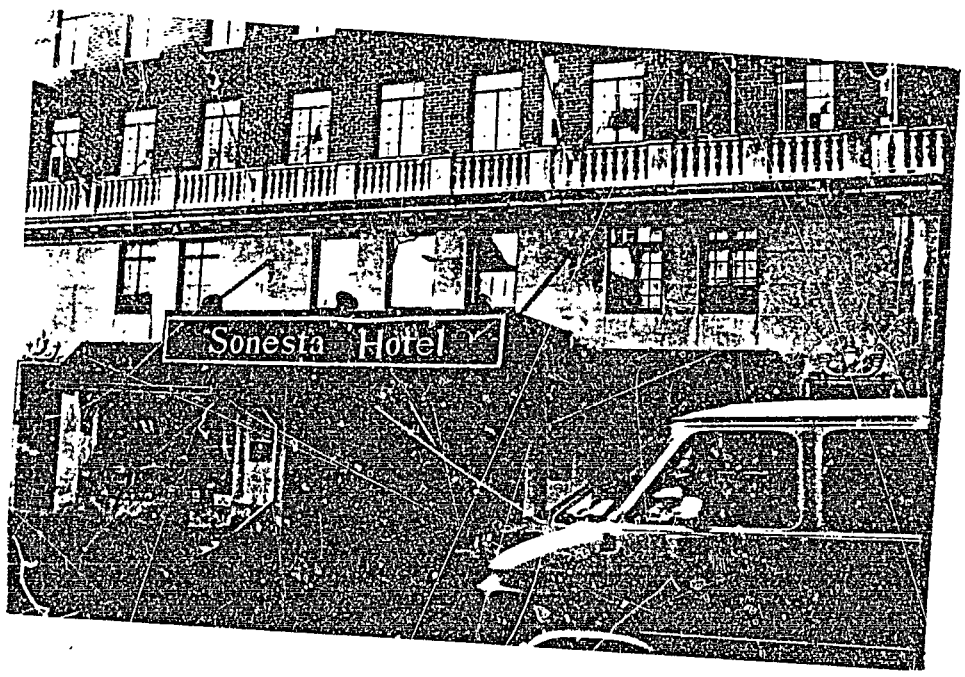

149-159 High

Certificate of Flame Resistance

REGISTERED STATE OF CALIFORNIA STATE FIRE MARSHAL FLAME RETARDANT F-21

REGISTERED APPLICATION CONCERN No. GA-217

ISSUED BY
JOHN BOYLE & COMPANY, INC.
Salisbury Road
Statesville, NC 28677
704-872-8151

Date treated or manufactured

This is to certify that the materials described below have been flame-retardant treated (or are inherently nonflammable).

FOR _____ ADDRESS _____

CITY _____ STATE _____

Certification is hereby made that: (Check "a" or "b")

[ ] (a) The articles described below this Certificate have been treated with a flame-retardant chemical approved and registered by the State Fire Marshal and that the application of said chemical was done in conformance with the laws of the State of California and the Rules and Regulations of the State Fire Marshal.

Name of chemical used _____ Chem. Reg. No. _____

Method of application _____

[X] (b) The articles described below are made from a flame-resistant fabric or material registered and approved by the State Fire Marshal for such use.

Trade name of flame-resistant fabric or material used _____ Reg. No. _____

The Flame-Retardant Process Used WILL NOT Be Removed By Washing

JOHN BOYLE & COMPANY, INC.

JOHN BOYLE & COMPANY, INC. By Walter Conine
Specialty Products Manager

Name of Applicator or Production Superintendent

SOLD TO:
NEW ENGLAND SPEC ADV &
AWNING DESIGNS
56 WARREN AVENUE
PORTLAND
ME 04103

CONTROL#--> 06622
ORDER#----> 31306
INVOICE#--> 074660
MFG DATE--> 10-07-90
QUANTITY--> 9.50

RECEIVED
MAR 0 4 1991
DEPT. OF BUILDING INSPECTIONS
CITY OF PORTLAND

STYLE----------> 622
DESCRIPTION----> 61"
REGISTER NO.---> F-121.4
CALENDAR NO.--->

149-159 High St.

Sell Certified Flame-Retardant Fabrics By BOYLE

Your product will meet the rigid specifications of the California Fire Marshal.

FLAMETEST II® PRO-TEC® | BIMINI FLAMETEST® ULTRA FAB® | WIDE TRAILER FABRIC PATIO® | FLAMETEST® SURFMATE®

JOHN BOYLE & COMPANY AND DISTRIBUTORS

1/4" = 1' SCALE

ILLUMINATION		LOCATION Sonesta				DATE	
CABINET TYPE	HEIGHT	LENGTH	WIDTH	RADIUS	COLOR		
FACE 1 MATERIAL	COLOR		COPY COLOR		B/G COLOR		
FACE 2 MATERIAL	COLOR		COPY COLOR		ROW/TRACK		
BUILDING TYPE	MOUNTING		INSTALLATION			POLE-SIZE	

N.E.S.A.
Sign Specifications
56 Warren Avenue
Portland, Me 04103
(207) 878-8846

FRONT VIEW

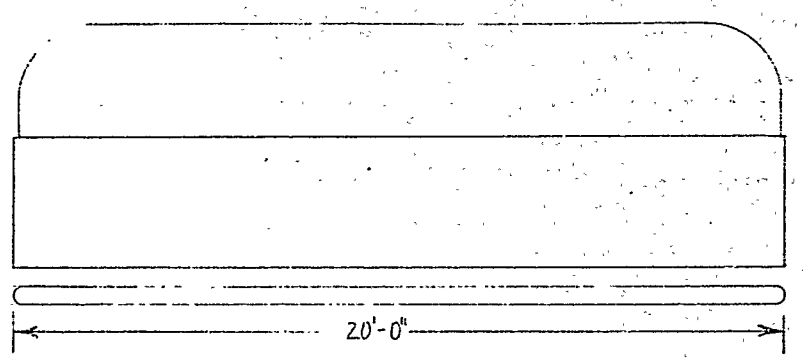

SIDE VIEW

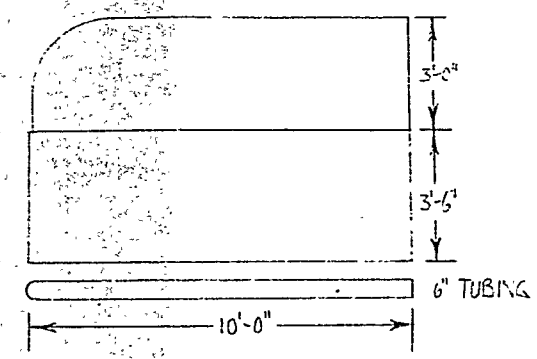

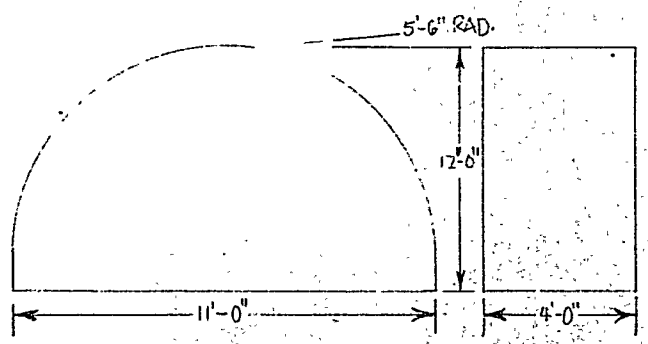

149-159 High

N.E.S.A.

Sign Specifications

56 Warren Avenue
Portland, Me 04103
(207) 878-8844

3/8" = 1' SCALE

ILLUMINATION		LOCATION SONESTA			DATE
CABINET TYPE	HEIGHT	LENGTH	WIDTH	RADIUS	COLOR
FACE 1 MATERIAL	COLOR	COPY COLOR	B/G COLOR		
FACE 2 MATERIAL	COLOR	COPY COLOR	ROW/TRACK		
BUILDING TYPE	MOUNTING	INSTALLATION	POLE-SIZE		

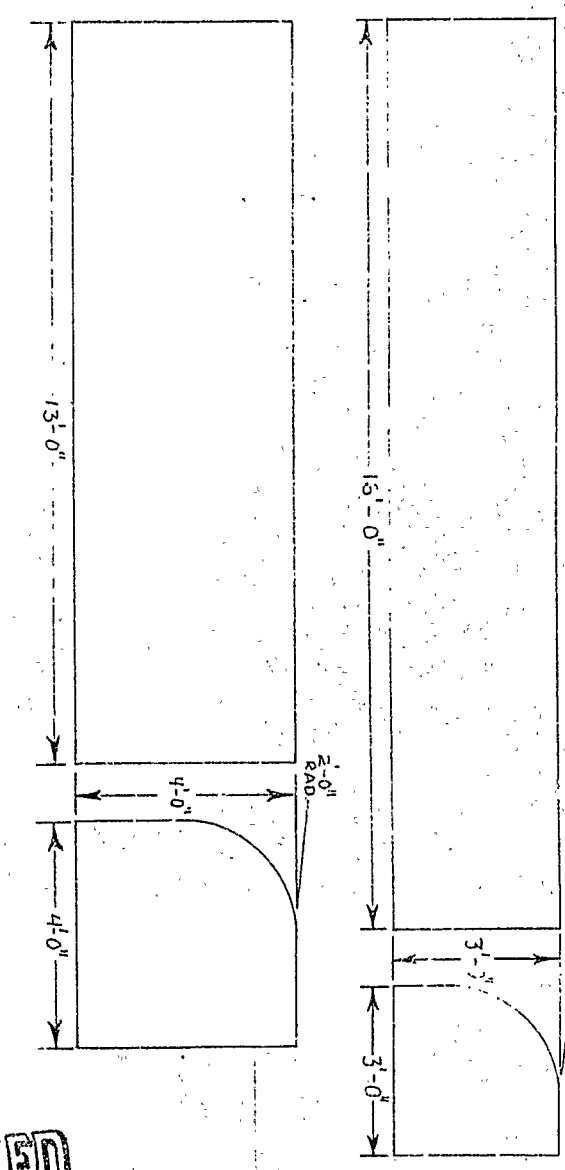

149-159 High

FIG. 2

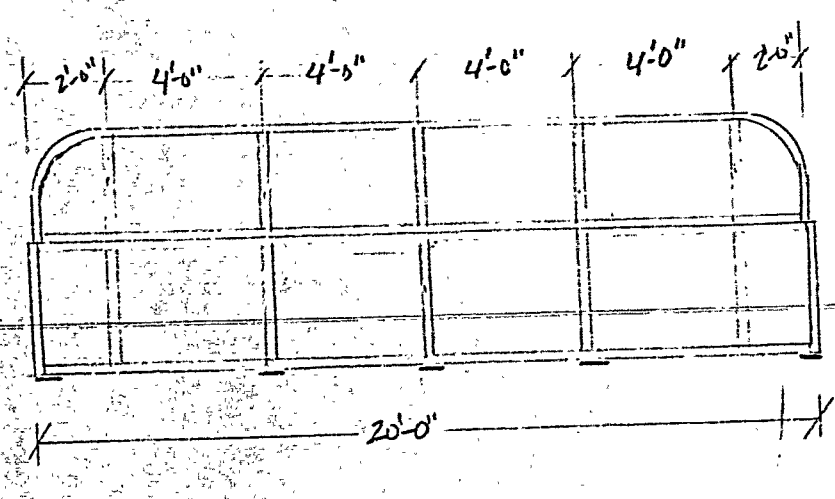

FRONT ELEVATION

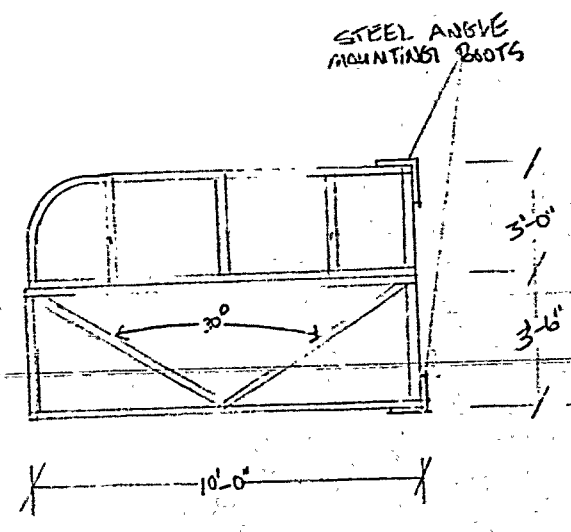

SIDE ELEVATION

149-159 High

N.E.S.A.
new england signs & awnings
new england screenprinting & apparel
new england specialty advertising

DATE
SCALE
DRAWN BY
DRAWING N

Designed for: SONESTA HOTEL	Location	DRAWING SPECIFICATIONS ACCEPTED BY	This design is the property of N.E. All production & duplication rights reserved by N.E.S.A. This drawing for your personal use and is not displayed outside of your organiza exhibited in any fashion.
SCALE 1/4" = 1'		CHIEF INSPECTOR DATE	

FIG. 1

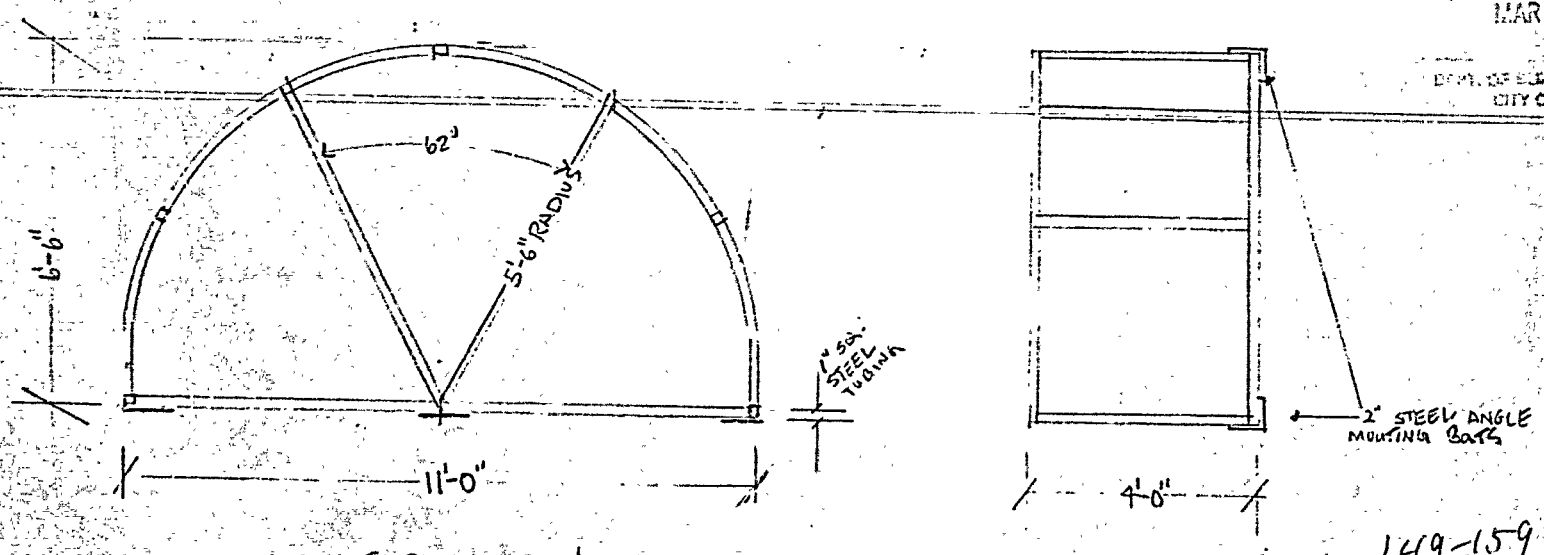

FRONT ELEVATION

SIDE ELEVATION

149-159 High

SCALE: 3/8" = 1'

STRUCT. LAYOUT — 1 OF 3

N.E.S.A.

☐ new ☐ new ☐ new
signs & awnings
screenprinting & apparel
specialty advertising

DATE

SCALE

DRAWN BY

DRAWING NU

Designed for: SONESTA HOTEL

Location

DRAWING SPECIFICATIONS ACCEPTED BY

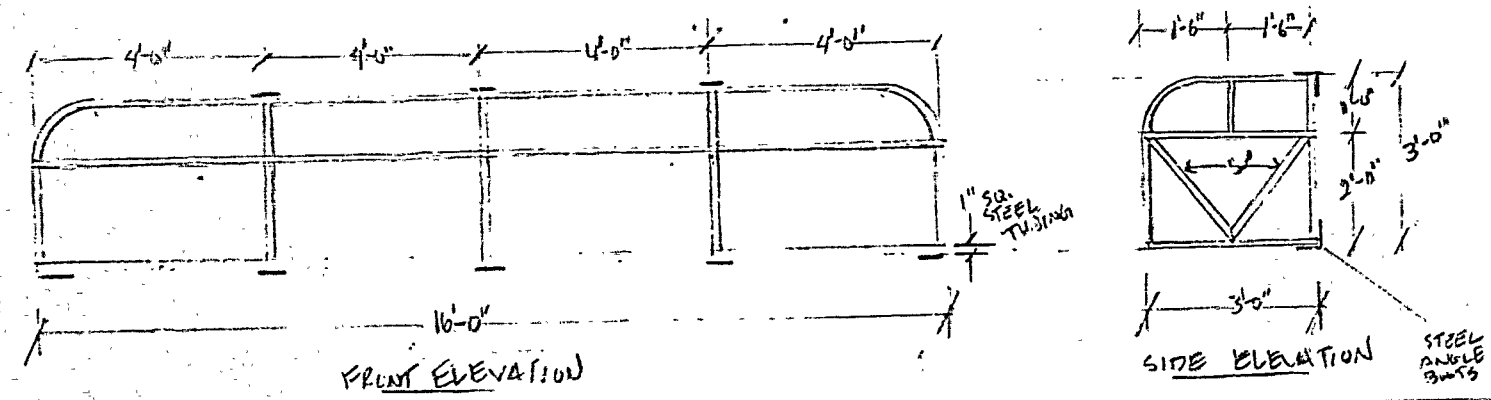

FIG. 4

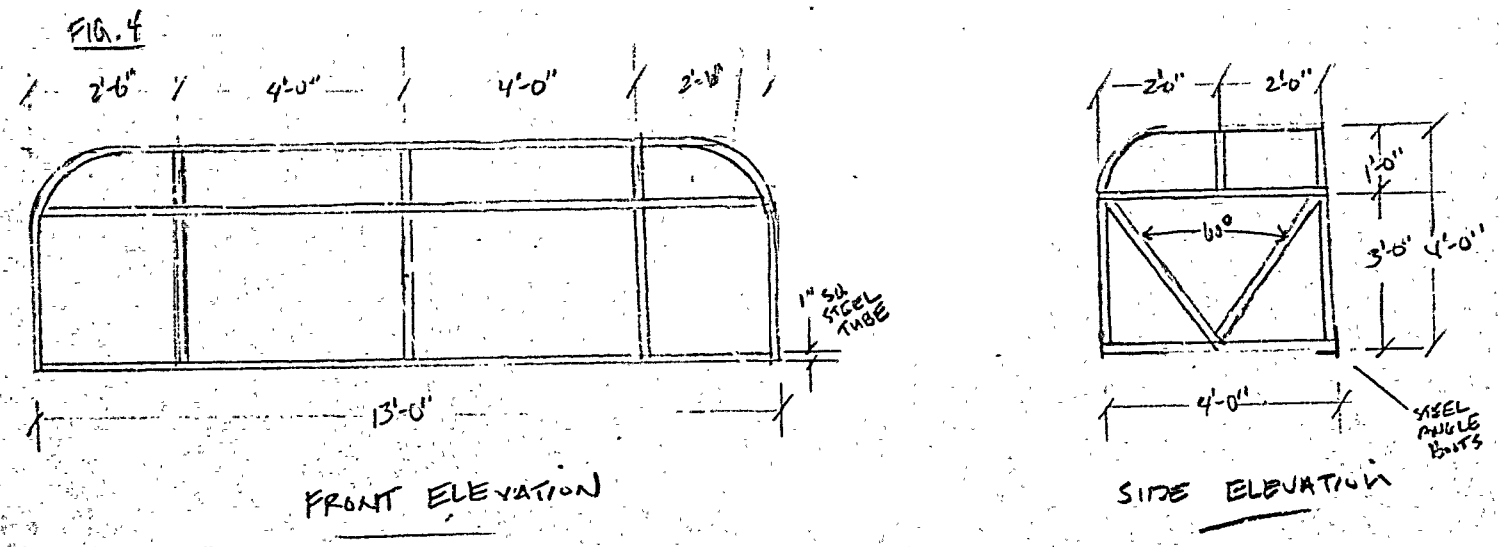

N.E.S.A.
new england signs & awnings
new england screenprinting & apparel
DATE
SCALE
DRAWN BY
DRAWING

Designed for:	Location	DRAWING SPECIFICATIONS ACCEPTED BY	
SONESTA HOTEL			

APPLICATION FOR PERMIT

PERMIT ISSUED
MAR 13 1984
CITY of PORTLAND

B.O.C.A. USE GROUP .....

B.O.C.A. TYPE OF CONSTRUCTION ..... 0196 .....

ZONING LOCATION ..... PORTLAND, MAINE March 6, 1984

To the CHIEF OF BUILDING & INSPECTION SERVICES, PORTLAND, MAINE

The undersigned hereby applies for a permit to erect, alter, repair, demolish, move or install the following building, structure, equipment or change use in accordance with the Laws of the State of Maine, the Portland B.O.C.A. Building Code and Zoning Ordinance of the City of Portland with plans and specifications, if any, submitted herewith and the following specifications:

LOCATION 157 High Street - Sonesta Hotel - 1st floor restaurant & bar area

1. Owner's name and address Sonesta Int'l Corp. - same ..... Fire District #1 ☐ #2 ☐
2. Lessee's name and address ..... Telephone 775-8411
3. Contractor's name and address St. Peter Construction - 27 Cressey Rd. Gorham ..... Telephone .....

Telephone 839-3960

Proposed use of building hotel ..... No. of sheets .....

Last use same ..... No. families .....

Material ..... No. stories ..... Heat ..... Style of roof ..... Roofing ..... No. families .....

Other buildings on same lot .....

Estimated contractural cost $ 4,000

FIELD INSPECTOR—Mr. .....

@ 775-5451

Appeal Fees	$ .....
Base Fee	30.00
Late Fee	.....
TOTAL	$ 30.00

To make alterations to existing restaurant and bar as per plans. 3 sheets of plans. no structural changes.

send permit to # 3 04038

Stamp of Special Conditions

NOTE TO APPLICANT: Separate permits are required by the installers and subcontractors of heating, plumbing, electrical and mechanicals.

DETAILS OF NEW WORK

Is any plumbing involved in this work? ..... Is any electrical work involved in this work? yes

Is connection to be made to public sewer? ..... If not, what is proposed for sewage? .....

Has septic tank notice been sent? ..... Form notice sent? .....

Height average grade to top of plate ..... Height average grade to highest point of roof .....

Size, front ..... depth ..... No. stories ..... solid or filled land? ..... earth or rock? .....

Material of foundation ..... Thickness, top ..... bottom ..... cellar .....

Kind of roof ..... Rise per foot ..... Roof covering .....

No. of chimneys ..... Material of chimneys ..... of lining ..... Kind of heat ..... fuel .....

Framing Lumber—Kind ..... Dressed or full size? ..... Corner posts ..... Sills .....

Size Girder ..... Columns under girders ..... Size ..... Max. on centers .....

Studs (outside walls and carrying partitions) 2x4-16" O. C. Bridging in every floor and flat roof span over 8 feet.

Joists and rafters: 1st floor ..... 2nd ..... 3rd ..... roof .....

On centers: 1st floor ..... 2nd ..... 3rd ..... roof .....

Maximum span: 1st floor ..... 2nd ..... 3rd ..... roof .....

If one story building with masonry walls, thickness of walls? ..... height? .....

IF A GARAGE

No. cars now accommodated on same lot ..... to be accommodated ..... number commercial cars to be accommodated .....

Will automobile repairing be done other than minor repairs to cars habitually stored in the proposed building? .....

APPROVALS BY: *DATE*

BUILDING INSPECTION—PLAN EXAMINER .....

ZONING: .....

BUILDING CODE: .....

Fire Dept.: .....

Health Dept.: .....

Others: .....

MISCELLANEOUS

Will work require disturbing of any tree on a public street? no

Will there be in charge of the above work a person competent to see that the State and City requirements pertaining thereto are observed? yes

Signature of Applicant Maurice St. Peter ..... Phone # same

Type Name of above Maurice St. Peter for St. Peter Construction ..... 1 ☐ 2 ☐ 3 ☒ 4 ☐

Other ..... and Address .....

3

FIELD INSPECTOR'S COPY APPLICANT'S COPY OFFICE FILE COPY

APPLICATION FOR PERMIT

DEPARTMENT OF BUILDING INSPECTIONS SERVICES

ELECTRICAL INSTALLATIONS

Date March 8, 19 84

Receipt and Permit number B 19970

To the CHIEF ELECTRICAL INSPECTOR, *Portland, Maine:*

The undersigned hereby applies for a permit to make electrical installations in accordance with the laws of Maine, the Portland Electrical Ordinance, the National Electrical Code and the following specifications:

LOCATION OF WORK: 157 High Street

OWNER'S NAME: Sonesta Hotel ADDRESS: same

	FEES
OUTLETS:	
Receptacles _____ Switches _____ Plugmold _____ ft. TOTAL 1-30	3.00
FIXTURES: (number of)	
Incandescent 4 Flourescent _____ (not strip) TOTAL 1-10	3.00
Strip Flourescent _____ ft.	
SERVICES:	
Overhead _____ Underground _____ Temporary _____ TOTAL amperes _____	
METERS: (number of) _____	
MOTORS: (number of)	
Fractional _____	
1 HP or over _____	
RESIDENTIAL HEATING:	
Oil or Gas (number of units) _____	
Electric (number of rooms) _____	
COMMERCIAL OR INDUSTRIAL HEATING:	
Oil or Gas (by a main boiler) _____	
Oil or Gas (by separate units) _____	
Electric Under 20 kws _____ Over 20 kws _____	
APPLIANCES: (number of)	
Ranges _____ Water Heaters _____	
Cook Tops _____ Disposals _____	
Wall Ovens _____ Dishwashers _____	
Dryers _____ Compactors _____	
Fans _____ Others (denote) _____	
TOTAL _____	
MISCELLANEOUS: (number of)	
Branch Panels _____	
Transformers _____	
Air Conditioners Central Unit _____	
Separate Units (windows) _____	
Signs 20 sq. ft. and under _____	
Over 20 sq. ft. _____	
Swimming Pools Above Ground _____	
In Ground _____	
Fire/Burglar Alarms Residential _____	
Commercial _____	
Heavy Duty Outlets, 220 Volt (such as welders) 30 amps and under _____	
over 30 amps _____	
Circus, Fairs, etc. _____	
Alterations to wires x - relocating outlets	2.00
Repairs after fire _____	
Emergency Lights, battery _____	
Emergency Generators _____	
INSTALLATION FEE DUE:	
FOR ADDITIONAL WORK NOT ON ORIGINAL PERMIT ..... DOUBLE FEE DUE:	
FOR REMOVAL OF A "STOP ORDER" (304-16.b)	
TOTAL AMOUNT DUE:	8.00

INSPECTION:

Will be ready on ready, 19 ; or Will Call _____

CONTRACTOR'S NAME: ~~Pace Electric~~

ADDRESS: 152 Lewiston Rd. Gray, Me.

TEL.: 657-3621

MASTER LICENSE NO.: 4371

LIMITED LICENSE NO.: _____

SIGNATURE OF CONTRACTOR: Russell Dann

INSPECTOR'S COPY — WHITE

OFFICE COPY — CANARY

CONTRACTOR'S COPY — GREEN

ELECTRICAL INSTALLATIONS—

Permit Number 19970

Location 152 High St.

Owner Sonesta Hotel

Date of Permit 3-8-84

Final Inspection 4-18-84

By Inspector Libby

Permit Application Register Page No. 25

INSPECTIONS: Service _____ by _____

Service called in _____

Closing-in 3-8-84 by Libby

PROGRESS INSPECTIONS: 4-18-84 / / / / / / / / / / / /

CODE COMPLIANCE COMPLETED

DATE 4-18-84

DATE: _____ REMARKS:

APPLICATION FOR PERMIT

DEPARTMENT OF BUILDING INSPECTIONS SERVICES

ELECTRICAL INSTALLATIONS

Date May 1, 1984

Receipt and Permit number B21644

To the CHIEF ELECTRICAL INSPECTOR, *Portland, Maine:*

The undersigned hereby applies for a permit to make electrical installations in accordance with the laws of Maine, the Portland Electrical Ordinance, the National Electrical Code and the following specifications:

LOCATION OF WORK: 157 High Street - 1st. Fl. Kitchen Area

OWNER'S NAME: Sonesta Hotel ADDRESS: same

	FEES
OUTLETS:	
Receptacles ____ Switches ____ Plugmold ____ ft. TOTAL ____	
FIXTURES: (number of)	
Incandescent ____ Flourescent ____ (not strip) TOTAL ____	
Strip Flourescent ____ ft.	
SERVICES:	
Overhead ____ Underground ____ Temporary ____ TOTAL amperes ____	
METERS: (number of) ____	
MOTORS: (number of)	
Fractional ____	
1 HP or over ~~3 - 1½ HP~~	3.00
RESIDENTIAL HEATING:	
Oil or Gas (number of units) ____	
Electric (number of rooms) ____	
COMMERCIAL OR INDUSTRIAL HEATING:	
Oil or Gas (by a main boiler) ____	
Oil or Gas (by separate units) ____	
Electric Under 20 kws ____ Over 20 kws ____	
APPLIANCES: (number of)	
Ranges ____ Water Heaters ____	
Cook Tops ____ Disposals ____	
Wall Ovens ____ Dishwashers ____	
Dryers ____ Compactors ____	
Fans ____ Others (denote) ____	
TOTAL ____	
MISCELLANEOUS: (number of)	
Branch Panels ____	
Transformers ____	
Air Conditioners Central Unit ____	
Separate Units (windows) ____	
Signs 20 sq. ft. and under ____	
Over 20 sq. ft. ____	
Swimming Pools Above Ground ____	
In Ground ____	
Fire/Burglar Alarms Residential ____	
Commercial ____	
Heavy Duty Outlets, 220 Volt (such as welders) 30 amps and under ____	
over 30 amps ____	
Circus, Fairs, etc. ____	
Alterations to wires ____	
Repairs after fire ____	
Emergency Lights, battery ____	
Emergency Generators ____	
INSTALLATION FEE DUE:	
FOR ADDITIONAL WORK NOT ON ORIGINAL PERMIT ..... DOUBLE FEE DUE:	
FOR REMOVAL OF A "STOP ORDER" (304-16.b)	
TOTAL AMOUNT DUE:	5.00 Min.

INSPECTION: MORNING

Will be ready on May 7, 1984; or Will Call ____

CONTRACTOR'S NAME: Stanley L. Benware - AAA Energy Service Co.

ADDRESS: Box 908 - Commercial Rd., Scar., Me. 04074

TEL.: 883-9536

MASTER LICENSE NO.: 07817

LIMITED LICENSE NO.: ____

SIGNATURE OF CONTRACTOR: James J. Halsey

INSPECTOR'S COPY — WHITE

OFFICE COPY — CANARY

CONTRACTOR'S COPY — GREEN

ELECTRICAL INSTALLATIONS

Permit Number 216 44

Location 157 High St.

Owner Sonesta Hotel

Date of Permit 5-1-84

Final Inspection 7-18-84

By Inspector [illegible]

Permit Application Register Page No. 31

INSPECTIONS: Service _____ by _____

Service called in _____

Closing-in _____ by _____

PROGRESS INSPECTIONS: 7-18-84 / _____

_____ / _____ / _____

_____ / _____ / _____

_____ / _____ / _____

_____ / _____ / _____

_____ / _____ / _____

CODE COMPLIANCE COMPLETED

DATE 7-18-84

DATE: REMARKS:

CITY OF PORTLAND

DEPARTMENT OF PLANNING & URBAN DEVELOPMENT
INSPECTION SERVICES DIVISION

May 3, 1984

AAA Energy Service Co.
4 Commercial Road
P.O. Box 903
Scarborough, ME 04074

RE: 157 High Street, Portland

Gentlemen:

Your application to install an exhaust system has been reviewed, and a permit is issued subject to the following requirement.

The installation shall comply with NFPA #96 standards.

If you have any questions on this, please call this office.

Sincerely,

P. Samuel Hoffses
Chief of Inspection Services

PSH/kat

Receipt - Applicant's Copy

CITY OF PORTLAND, MAINE

Department of Building Inspection

L 09198

5-1 1984

Received from 999 Energy Service Co. a fee

of Sixty Dollars & 00 /100 Dollars $ 60.-

for permit to install / erect / alter / move / demolish Renovations - Exhaust System

at 157 High St. Est. Cost $ 9,800.-

R. S. Hoffses
Inspector of Buildings

Per JMC

THIS IS NOT A PERMIT

No work is to be started until PERMIT CARD is actually posted upon the premises. Acceptance of fee is no guarantee that permit will be granted. PRESERVE THIS RECEIPT. In case permit cannot be granted the amount of the fee will be refunded upon return of the receipt less $5. or 10% whichever is greater.

APPLICATION FOR PERMIT

PERMIT ISSUED
MAY 2 1984
CITY of PORTLAND

B.O.C.A. USE GROUP .....

B.O.C.A. TYPE OF CONSTRUCTION 449

ZONING LOCATION ..... PORTLAND, MAINE . May 1, 1984

To the CHIEF OF BUILDING & INSPECTION SERVICES, PORTLAND, MAINE

The undersigned hereby applies for a permit to erect, alter, repair, demolish, move or install the following building, structure, equipment or change use in accordance with the Laws of the State of Maine, the Portland B.O.C.A. Building Code and Zoning Ordinance of the City of Portland with plans and specifications, if any, submitted herewith and the following specifications:

LOCATION .....157 High Street - 1st. Fl. Kitchen area..... Fire District #1 ☐, #2 ☐

1. Owner's name and address ..Sonesta Hotel - same..... Telephone 775-5411...
2. Lessee's name and address ..... Telephone .....
3. Contractor's name and address AAA Energy Service Co. - 4 Commercial Rd., Scar., Me. 04074 P. O. Box 908, Scar. Me. Telephone 883-9536...

Proposed use of building ..... No. of sheets .....

Last use ..... No. families .....

Material ..... No. stories ..... Heat ..... Style of roof ..... No. families .....

Other buildings on same lot ..... Roofing .....

Estimated contractural cost $9,800.00...

FIELD INSPECTOR—Mr. .....
@ 775-5451

Appeal Fees	$ .....
Base Fee	.....
Late Fee	.....
TOTAL	$ 60.00

Renovations - installing exhaust system, as per plan.

ISSUE PERMIT TO P. O. BOX #3

Stamp of Special Conditions

PERMIT ISSUED
WITH LETTER

NOTE TO APPLICANT: *Separate permits are required by the installers and subcontractors of heating, plumbing, electrical and mechanicals.*

DETAILS OF NEW WORK

Is any plumbing involved in this work? ..... Is any electrical work involved in this work? ....yes....

Is connection to be made to public sewer? ..... If not, what is proposed for sewage? .....

Has septic tank notice been sent? ..... Form notice sent? .....

Height average grade to top of plate ..... Height average grade to highest point of roof .....

Size, front ..... depth ..... No. stories ..... solid or filled land? ..... earth or rock? .....

Material of foundation ..... Thickness, top ..... bottom ..... cellar .....

Kind of roof ..... Rise per foot ..... Roof covering .....

No. of chimneys ..... Material of chimneys ..... of lining ..... Kind of heat ..... fuel .....

Framing Lumber—Kind ..... Dressed or full size? ..... Corner posts ..... Sills .....

Size Girder ..... Columns under girders ..... Size ..... Max. on centers .....

Studs (outside walls and carrying partitions) 2x4-16" O. C. Bridging in every floor and flat roof span over 8 feet.

Joists and rafters: 1st floor ....., 2nd ....., 3rd ....., roof .....

On centers: 1st floor ....., 2nd ....., 3rd ....., roof .....

Maximum span: 1st floor ....., 2nd ....., 3rd ....., roof .....

If one story building with masonry walls, thickness of walls? ..... height? .....

IF A GARAGE

No. cars now accommodated on same lot ....., to be accommodated ..... number commercial cars to be accommodated .....

Will automobile repairing be done other than minor repairs to cars habitually stored in the proposed building? .....

APPROVALS BY: *DATE*

BUILDING INSPECTION—PLAN EXAMINER .....

ZONING: .....

BUILDING CODE: .....

Fire Dept.: James F. Collins, Chief

Health Dept.: .....

Others .....

MISCELLANEOUS

Will work require disturbing of any tree on a public street? no

Will there be in charge of the above work a person competent to see that the State and City requirements pertaining thereto are observed? yes...

Signature of Applicant Dennis A. Halsey Phone # 883-9536

Type Name of above ..Dennis Halsey for AAA Energy Service☐ 2☐ 3☐ 4☐

Other .....

and Address .....

PERMIT ISSUED
WITH LETTER

FIELD INSPECTOR'S COPY APPLICANT'S COPY OFFICE FILE COPY

D. M. Rowe

Permit No. 449-84

Location 157 High St.

Owner Sonesta Hotel

Date of permit 5-3-84

Approved

Dwelling

Garage

Alteration ✓

NOTES

5/1/87

APPLICATION FOR PERMIT

PERMIT ISSUED
JUL 20 1984
CITY of PORTLAND

B.O.C.A. USE GROUP 871

B.O.C.A. TYPE OF CONSTRUCTION .....

ZONING LOCATION ... B-3 ..... PORTLAND, MAINE ... July 18, 1984

To the CHIEF OF BUILDING & INSPECTION SERVICES, PORTLAND, MAINE

The undersigned hereby applies for a permit to erect, alter, repair, demolish, move or install the following building, structure equipment or change use in accordance with the Laws of the State of Maine, the Portland B.O.C.A. Building Code and Zoning Ordinance of the City of Portland with plans and specifications, if any, submitted herewith and the following specifications:

LOCATION .....157 High Street - Sonesta Hotel ..... Fire District #1 ☐, #2 ☐

1. Owner's name and address ..Sonesta Hotel - same..... Telephone .....
2. Lessee's name and address .....761..... Telephone .....
3. Contractor's name and address Bailey Sign Co. - Box XXX, Portland 04104 Telephone 774-2843

..... No. of sheets .....

Proposed use of building ..hotel..... No. families .....

Last use ..same..... No. families .....

Material ..... No. stories ..... Heat ..... Style of roof ..... Roofing .....

Other buildings on same lot .....

Estimated contractural cost $8,000.00.... Appeal Fees $ .....

FIELD INSPECTOR—Mr. ..... Base Fee .....

@ 775-5451 Late Fee .....

180 sq. ft. of painted sign area facing 295, as per plan. TOTAL $ 51.00.....

ISSUE PERMIT TO #3 Stamp of Special Conditions

NOTE TO APPLICANT: *Separate permits are required by the installers and subcontractors of heating, plumbing, electrical and mechanicals.*

DETAILS OF NEW WORK

Is any plumbing involved in this work? ..... Is any electrical work involved in this work? .....

Is connection to be made to public sewer? ..... If not, what is proposed for sewage? .....

Has septic tank notice been sent? ..... Form notice sent? .....

Height average grade to top of plate ..... Height average grade to highest point of roof .....

Size, front ..... depth ..... No. stories ..... solid or filled land? ..... earth or rock? .....

Material of foundation ..... Thickness, top ..... bottom ..... cellar .....

Kind of roof ..... Rise per foot ..... Roof covering .....

No. of chimneys ..... Material of chimneys ..... of lining ..... Kind of heat ..... fuel .....

Framing Lumber—Kind ..... Dressed or full size? ..... Corner posts ..... Sills .....

Size Girder ..... Columns under girders ..... Size ..... Max. on centers .....

Studs (outside walls and carrying partitions) 2x4-16" O. C. Bridging in every floor and flat roof span over 8 feet.

Joists and rafters: 1st floor ....., 2nd ....., 3rd ....., roof .....

On centers: 1st floor ....., 2nd ....., 3rd ....., roof .....

Maximum span: 1st floor ....., 2nd ....., 3rd ....., roof .....

If one story building with masonry walls, thickness of walls? ..... height? .....

IF A GARAGE

No. cars now accommodated on same lot ....., to be accommodated ..... number commercial cars to be accommodated .....

Will automobile repairing be done other than minor repairs to cars habitually stored in the proposed building? .....

APPROVALS BY: *DATE*

BUILDING INSPECTION—PLAN EXAMINER .....

ZONING: OK m.a.w. 7/18/84

BUILDING CODE: .....

Fire Dept. .....

Health Dept. .....

Others: Douglas Masse Planning

MISCELLANEOUS

Will work require disturbing of any tree on a public street? no

Will there be in charge of the above work a person competent to see that the State and City requirements pertaining thereto are observed? yes

Signature of Applicant ..... Phone # 774-2843

Type Name of above .Bruce Bailey for Bailey Sign ..... 1 ☐ 2 ☐ 3 ☑ 4 ☐

Other .....

and Address .....

FIELD INSPECTOR'S COPY APPLICANT'S COPY OFFICE FILE COPY

[e] ma. Hotel

Permit No. 871/84

Location 157 High St.

Owner Sonesta Hotel

Date of permit July 18 84

Approved July 20 84

~~Dwelling~~

~~Garage~~ SIGN

~~Alteration~~

NOTES Completed 8/12/84

CITY OF PORTLAND

DEPARTMENT OF PLANNING & URBAN DEVELOPMENT
INSPECTION SERVICES DIVISION

May 3, 1984

AAA Energy Service Co.
4 Commercial Road
P.O. Box 903
Scarborough, ME 04074

RE: 157 High Stre.., Portland

Gentlemen:

Your application to install an exhaust system has been reviewed, and a permit is issued subject to the following requirement.

The installation shall comply with NFPA #96 standards.

If you have any questions on this, please call this office.

Sincerely,

P. Samuel Hoffses
Chief of Inspection Services

PSH/kat

389 CONGRESS STREET • PORTLAND, MAINE 04101 • TELEPHONE (207) 775-5451

Receipt - Applicant's Copy

CITY OF PORTLAND, MAINE

Department of Building Inspection

L 09198

5-1 1984

Received from 999 Energy Service Co. a fee

of Sixty Dollars & '00 /100 Dollars $ 60.-

for permit to install / erect / alter / move / demolish Renovations - Exhaust System

at 157 High St. Est. Cost $ 9,800.-

R. S. Hoffses
Inspector of Buildings

Per J M R

THIS IS NOT A PERMIT

No work is to be started until PERMIT CARD is actually posted upon the premises. Acceptance of fee is no guarantee that permit will be granted. PRESERVE THIS RECEIPT In case permit cannot be granted the amount of the fee will be refunded upon return of the receipt less $5. or 10% whichever is greater.

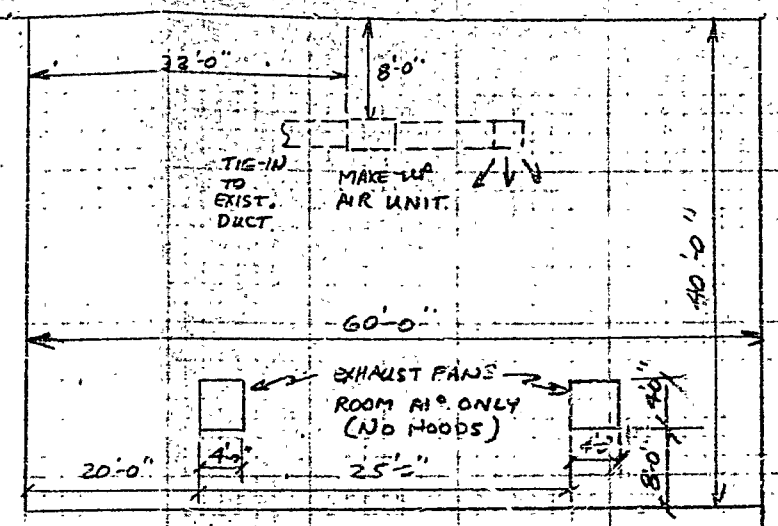

PART PLAN - KITCHEN
NO SCALE

— HIGH ST. —

SONESTA HOTEL
KITCHEN EXHAUST SYSTEM
AA A ENERGY SERVICE CO.
SCARBOROUGH ME
4-30-84 SK-1057

APPLICATION FOR PERMIT

PERMIT ISSUED
MAY 3 1984
CITY of PORTLAND

B.O.C.A. USE GROUP .....
B.O.C.A. TYPE OF CONSTRUCTION 449

ZONING LOCATION ..... PORTLAND, MAINE May 1, 1984

To the CHIEF OF BUILDING & INSPECTION SERVICES, PORTLAND, MAINE

The undersigned hereby applies for a permit to erect, alter, repair, demolish, move or install the following building, structure, equipment or change use in accordance with the Laws of the State of Maine, the Portland B.O.C.A. Building Code and Zoning Ordinance of the City of Portland with plans and specifications, if any, submitted herewith and the following specifications:

LOCATION ..... 157 High Street - 1st Fl. Kitchen area ..... Fire District #1 ☐, #2 ☐

1. Owner's name and address Sonesta Hotel - same ..... Telephone 775-5411
2. Lessee's name and address ..... Telephone
3. Contractor's name and address AAA Energy Service Co. - 4 Commercial Rd., Scar., Me. 04074 Telephone 883-9536
   P. O. Box 908, Scar. Me.

No. of sheets .....

Proposed use of building ..... No. families .....

Last use ..... No. families .....

Material ..... No. stories ..... Heat ..... Style of roof ..... Roofing .....

Other buildings on same lot .....

Estimated contractural cost $9,800.00

FIELD INSPECTOR—Mr. Rowe
@ 775-5451

Renovations - installing exhaust system, as per plan.

Appeal Fees	$
Base Fee	
Late Fee	
TOTAL	$ 60.00

ISSUE PERMIT TO P. O. BOX #3

Stamp of Special Conditions

PERMIT ISSUED
WITH LETTER

NOTE TO APPLICANT: *Separate permits are required by the installers and subcontractors of heating, plumbing, electrical and mechanicals.*

DETAILS OF NEW WORK

Is any plumbing involved in this work? ..... Is any electrical work involved in this work? ....yes....

Is connection to be made to public sewer? ..... If not, what is proposed for sewage? .....

Has septic tank notice been sent? ..... Form notice sent? .....

Height average grade to top of plate ..... Height average grade to highest point of roof .....

Size, front ..... depth ..... No. stories ..... solid or filled land? ..... earth or rock? .....

Material of foundation ..... Thickness, top ..... bottom ..... cellar .....

Kind of roof ..... Rise per foot ..... Roof covering .....

No. of chimneys ..... Material of chimneys ..... of lining ..... Kind of heat ..... fuel .....

Framing Lumber—Kind ..... Dressed or full size? ..... Corner posts ..... Sills .....

Size Girder ..... Columns under girders ..... Size ..... Max. on centers .....

Studs (outside walls and carrying partitions) 2x4-16" O. C. Bridging in every floor and flat roof span over 8 feet.

Joists and rafters: 1st floor ....., 2nd ....., 3rd ....., roof .....

On centers: 1st floor ....., 2nd ....., 3rd ....., roof .....

Maximum span: 1st floor ....., 2nd ....., 3rd ....., roof .....

If one story building with masonry walls, thickness of walls? ..... height? .....

IF A GARAGE

No. cars now accommodated on same lot ....., to be accommodated ..... number commercial cars to be accommodated .....

Will automobile repairing be done other than minor repairs to cars habitually stored in the proposed building? .....

APPROVALS BY:	*DATE*
BUILDING INSPECTION—PLAN EXAMINER	
ZONING:	
BUILDING CODE:	
Fire Dept.: James V. Collins, Lieut.	
Health Dept.:	
Others:	

MISCELLANEOUS

Will work require disturbing of any tree on a public street? no

Will there be in charge of the above work a person competent to see that the State and City requirements pertaining thereto are observed? yes

Signature of Applicant Dennis D. Halsey Phone # 883-9536

Type Name of above Dennis Halsey for AAA Energy Service ☐ 2 ☐ 3 ☐ 4 ☐

Other .....
and Address .....

PERMIT ISSUED
WITH LETTER

FIELD INSPECTOR'S COPY APPLICANT'S COPY OFFICE FILE COPY

D. M. Rowe

Permit No. 449-84

Location 157 High St.

Owner Sonesta Hotel

Date of permit 5-3-84

Approved

Dwelling

Garage

Alteration ✓

NOTES

5/1/84

baileysign
Thompson's Point, Box 761, Portland, Maine 04104
774 7843

Customer SONESTA	Scale 3/16"
Job Number 2252	Date 7·9·84
Location 157 High Street	

58072

HARLAN F. SPILLER CO. INC.

40'

4'6"

14'

WHITE LETTERS
GREEN BACKGROUND
PAINTED ON WALL

Approved for Planning/WPK
7-18-84
7-18-84

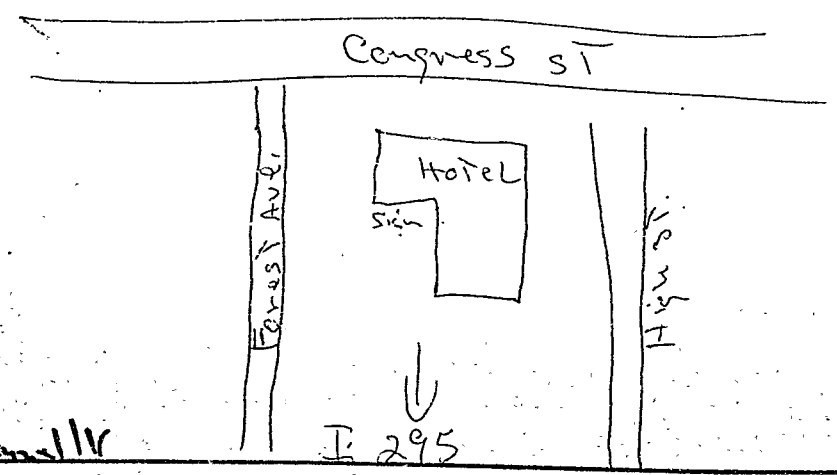

RECEIVED
JUL 18 1984
DEPT. OF BLDG. INSP.
CITY OF PORTLAND

APPLICATION FOR PERMIT

PERMIT ISSUED
JUL 20 1984
CITY of PORTLAND

B.O.C.A. USE GROUP ..... 871 .....

B.O.C.A. TYPE OF CONSTRUCTION .....

ZONING LOCATION ... B-3 ..... PORTLAND, MAINE .. July 18, 1984

To the CHIEF OF BUILDING & INSPECTION SERVICES, PORTLAND, MAINE

The undersigned hereby applies for a permit to erect, alter, repair, demolish, move or install the following building, structure, equipment or change use in accordance with the Laws of the State of Maine, the Portland B.O.C.A. Building Code and Zoning Ordinance of the City of Portland with plans and specifications, if any submitted herewith and the following specifications:

LOCATION .....157 High Street - Sonesta Hotel ..... Fire District #1 ☐, #2 ☐

1. Owner's name and address ..Sonesta Hotel - same.... ..... Telephone .....
2. Lessee's name and address .... Telephone .....
3. Contractor's name and address Bailey Sign Co. - Box [illegible], Portland 04104 Telephone ..774-2843...

..... No. of sheets .....

Proposed use of building ..hotel..... No. families .....

Last use ..same..... No. families .....

Material ..... No. stories ..... Heat ..... Style of roof ..... Roofing .....

Other buildings on same lot .....

Estimated contractural cost $ 8,000.00.... Appeal Fees $ .....

FIELD INSPECTOR—Mr. ..... Base Fee .....

@ 775-5451 Late Fee .....

180 sq. ft. of painted sign area facing 295, as per plan. TOTAL $ 51.00.....

ISSUE PERMIT TO #3

Stamp of Special Conditions

NOTE TO APPLICANT: *Separate permits are required by the installers and subcontractors of heating, plumbing, electrical and mechanicals.*

DETAILS OF NEW WORK

Is any plumbing involved in this work? ..... Is any electrical work involved in this work? .....

Is connection to be made to public sewer? ..... If not, what is proposed for sewage? .....

Has septic tank notice been sent? ..... Form notice sent? .....

Height average grade to top of plate ..... Height average grade to highest point of roof .....

Size: front ..... depth ..... No. stories ..... solid or filled land? ..... earth or rock? .....

Material of foundation ..... Thickness, top ..... bottom ..... cellar .....

Kind of roof ..... Rise per foot ..... Roof covering .....

No. of chimneys ..... Material of chimneys ..... of lining ..... Kind of heat ..... fuel .....

Framing Lumber—Kind ..... Dressed or full size? ..... Corner posts ..... Sills .....

Size Girder ..... Columns under girders ..... Size ..... Max. on centers .....

Studs (outside walls and carrying partitions) 2x4-16" O. C. Bridging in every floor and flat roof span over 8 feet.

Joists and rafters: 1st floor ....., 2nd ....., 3rd ....., roof .....

On centers: 1st floor ....., 2nd ....., 3rd ....., roof .....

Maximum span: 1st floor ....., 2nd ....., 3rd ....., roof .....

If one story building with masonry walls, thickness of walls? ..... height? .....

IF A GARAGE

No. cars now accommodated on same lot ....., to be accommodated ..... number commercial cars to be accommodated .....

Will automobile repairing be done other than minor repairs to cars habitually stored in the proposed building? .....

APPROVALS BY:	*DATE*	MISCELLANEOUS
BUILDING INSPECTION—PLAN EXAMINER		Will work require disturbing of any tree on a public street? ..no..
ZONING: OK MCW	7/18/84	
BUILDING CODE:		Will there be in charge of the above work a person competent to see that the State and City requirements pertaining thereto are observed? ..yes....
Fire Dept.:		
Health Dept.:		
Others: Douglas Masse Planning		

Signature of Applicant ..... Phone # 774-2843

Type Name of above .Bruce Bailey for Bailey Sign..... 1 ☐ 2 ☐ 3 ☒ 4 ☐

Other .....

and Address .....

FIELD INSPECTOR'S COPY APPLICANT'S COPY OFFICE FILE COPY

[e] ma Rose

Permit No. 871/84

Location 157 High St.

Owner Sarasta Hotel

Date of permit July 18 84

Approved July 20 84

~~Dwelling~~

~~Garage~~ Sign

~~Alteration~~

NOTES Completed.

8/7/84

000753

Permit # _____ **City of** Portland **BUILDING PERMIT APPLICATION Fee** $35. **Zone** _____ **Map #** _____ **Lot#** _____

Please fill out any part which applies to job. Proper plans must accompany form.

Owner: Sonesta Hotel Phone # _____

Address: 157 High St; Ptld, ME 04101

LOCATION OF CONSTRUCTION 157 High St.

Contractor: Haley's Metal Sho Sub.: _____ call

Address: 539 Elm St; Biddeford, ME 04005 Phone # 284-3570

Est. Construction Cost: $12,785. Proposed Use: commercial

Past Use: commercial

# of Existing Res. Units _____ # of New Res. Units _____

Building Dimensions L _____ W _____ Total Sq. Ft. _____

Stories: _____ # Bedrooms _____ Lot Size: _____

Is Proposed Use: Seasonal _____ Condominium _____ Conversion _____

Explain Conversion Install duct work to existing air-conditioning system

For Official Use Only

Date 7/10/90 Subdivision: _____

Inside Fire Limits _____ Lot _____

Bldg Code _____ Ownership: Public

Time Limit _____

Estimated Cost $12,785.

PERMIT ISSUED JUL 10 1990 City Of Portland

Zoning:

Street Frontage Provided: _____

Provided Setbacks: Front _____ Back _____ Side _____ Side _____

Review Required:

Zoning Board Approval: Yes ____ No ____ Date: _____

Planning Board Approval: Yes ____ No ____ Date: _____

Conditional Use: _____ Variance _____ Site Plan _____ Subdivision _____

Shoreland Zoning Yes ____ No ____ Floodplain Yes ____ No ____

Special Exception _____

Other _____ (Explain) _____

Foundation:

1. Type of Soil: _____
2. Set Backs - Front _____ Rear _____ Side(s) _____
3. Footings Size: _____
4. Foundation Size: _____
5. Other _____

Floor:

1. Sills Size: _____ Sills must be anchored.
2. Girder Size: _____
3. Lally Column Spacing: _____ Size: _____
4. Joists Size: _____ Spacing 16" O.C.
5. Bridging Type: _____ Size: _____
6. Floor Sheathing Type: _____ Size: _____
7. Other Material: _____

Exterior Walls:

1. Studding Size _____ Spacing _____
2. No. windows _____
3. No. Doors _____
4. Header Sizes _____ Span(s) _____
5. Bracing: Yes _____ No. _____
6. Corner Posts Size _____
7. Insulation Type _____ Size _____
8. Sheathing Type _____ Size _____
9. Siding Type _____ Weather Exposure _____
10. Masonry Materials _____
11. Metal Materials _____

Interior Walls:

1. Studding Size _____ Spacing _____
2. Header Sizes _____ Span(s) _____
3. Wall Covering Type _____
4. Fire Wall if required _____
5. Other Materials _____

Ceiling:

1. Ceiling Joists Size: _____
2. Ceiling Strapping Size _____ Spacing _____
3. Type Ceilings: _____
4. Insulation Type _____ Size _____
5. Ceiling Height: _____

Roof:

1. Truss or Rafter Size _____ Span _____
2. Sheathing Type _____ Size _____
3. Roof Covering Type _____

Chimneys:

Type: _____ Number of Fire Places _____

Heating:

Type of Heat: _____

Electrical:

Service Entrance Size: _____ Smoke Detector Required Yes ____ No ____

Plumbing:

1. Approval of soil test if required Yes _____ No _____
2. No. of Tubs or Showers _____
3. No. of Flushes _____
4. No. of Lavatories _____
5. No. of Other Fixtures _____

Swimming Pools:

1. Type: _____
2. Pool Size: _____ x _____ Square Footage _____
3. Must conform to National Electrical Code and State Law.

Permit Received By Louise E. Chase

Signature of Applicant _____ Date 7/10/90

Signature of CEO Norman Labbe _____ Date _____

Inspection Dates _____

White-Tax Assesor Yellow-GPCOG White Tag -CEO

PLOT PLAN

N

FEES (Breakdown From Front)

Base Fee $ 25 —
Subdivision Fee $
Site Plan Review Fee $
Other Fees $
(Explain)
Late Fee $

Inspection Record

Type	Date
	/ /
	/ /
	/ /
	/ /
	/ /
	/ /

COMMENTS

Signature of Applicant Maureen G. Pitko Date 7/10/90

HALEY'S METAL SHOP INC.
539 Elm Street P.O. Box 565
BIDDEFORD, MAINE 04005
(207) 284-8571

JOB: Soneste Hotel - 1st floor
SHEET NO. 1 OF 3
CALCULATED BY: BH DATE: 7-5-90
CHECKED BY: DATE:
SCALE: 3/16" = 1'-0"

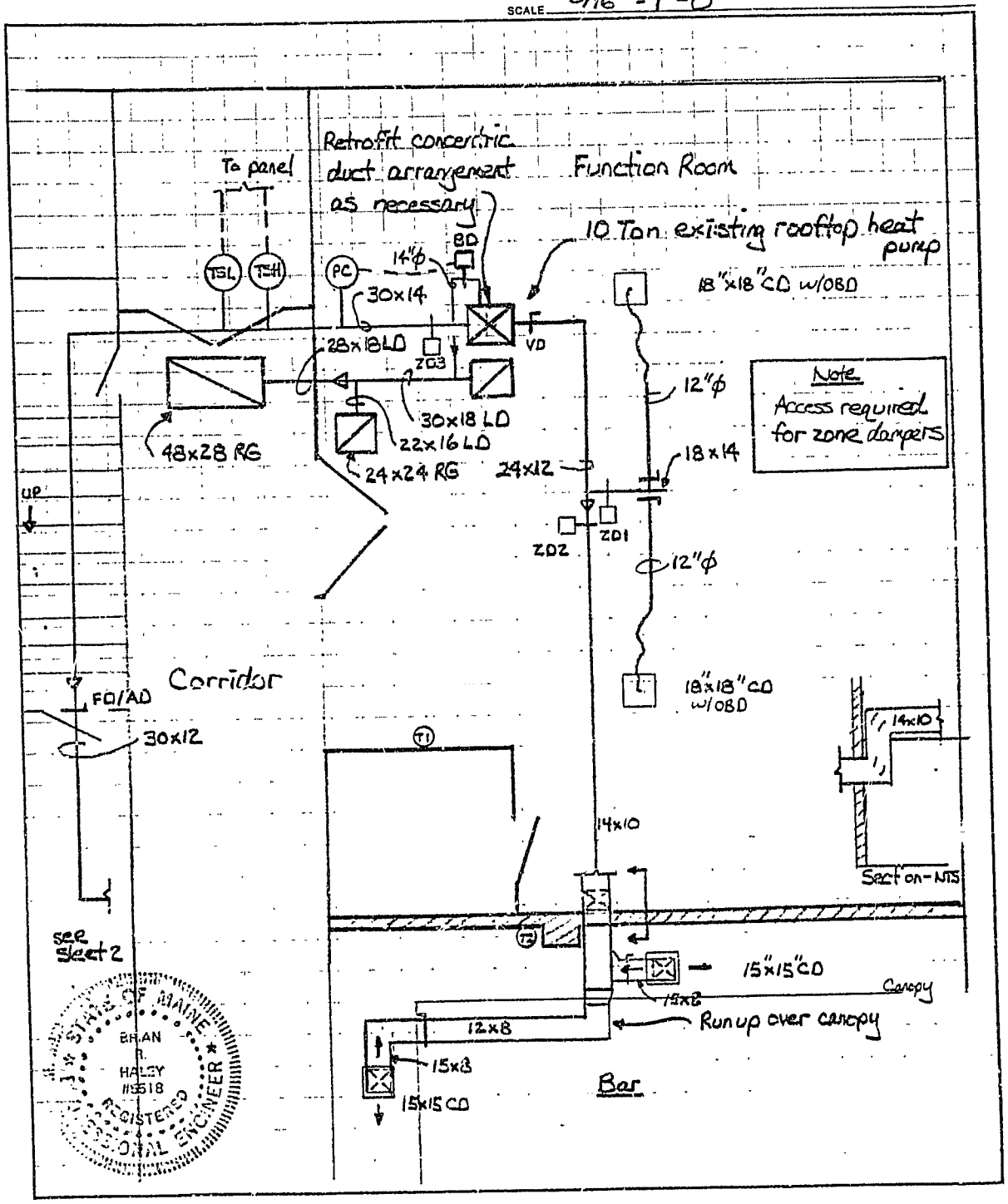

HALEY'S METAL SHOP INC.
539 Elm Street P.O. Box 565
BIDDEFORD, MAINE 04005
(207) 284-8571

JOB Sonesta Hotel - Mezzanine Level
SHEET NO. 2 OF 3
CALCULATED BY BH DATE 7-5-90
CHECKED BY DATE
SCALE 3/32" = 1'-0"

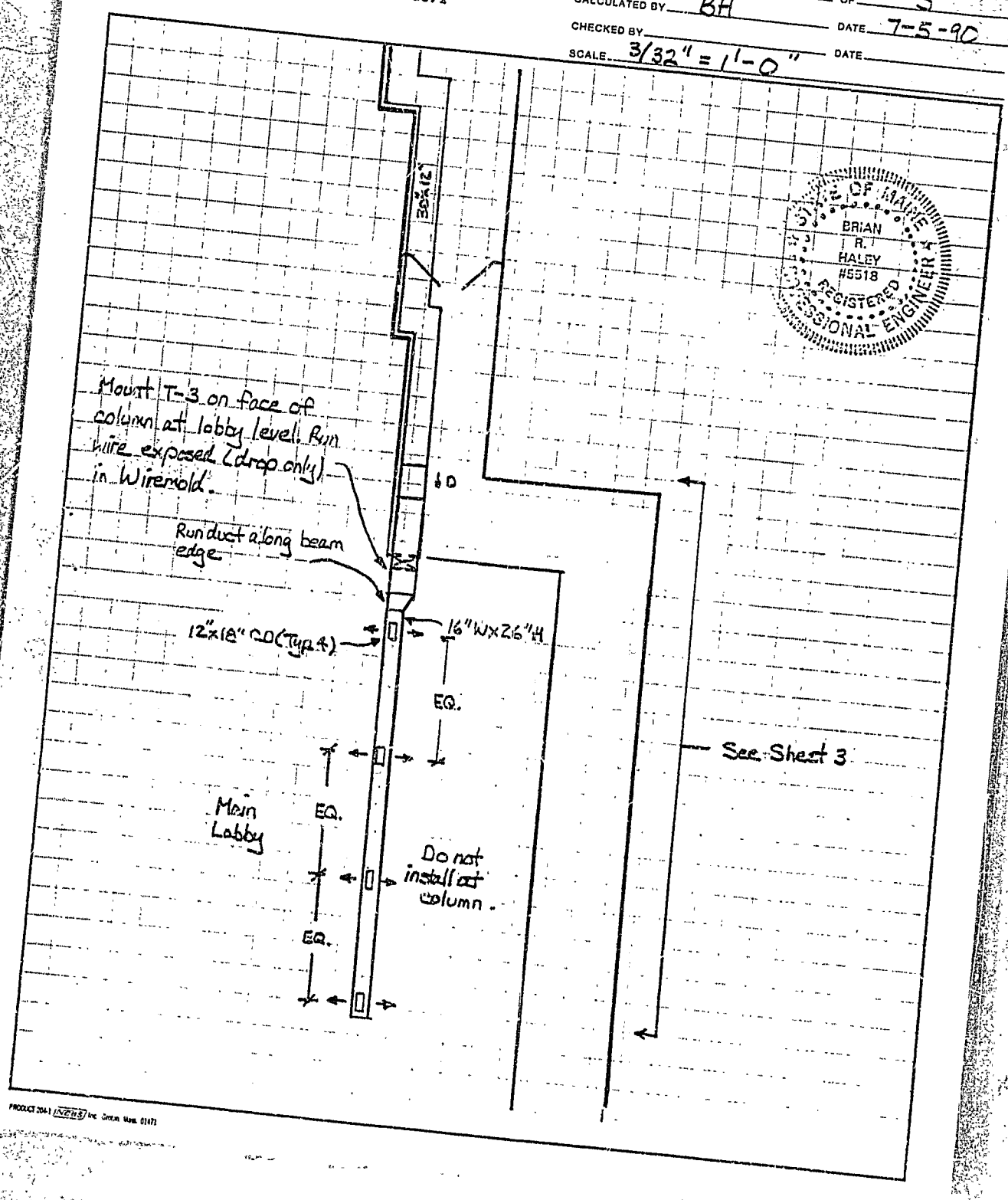

HALEY'S METAL SHOP INC.
539 Elm Street P.O. Box 565
BIDDEFORD, MAINE 04005
(207) 284-8571

JOB Sonesta Hotel
SHEET NO. 3 OF 3
CALCULATED BY BH DATE 7-5-90
CHECKED BY DATE
SCALE NTS

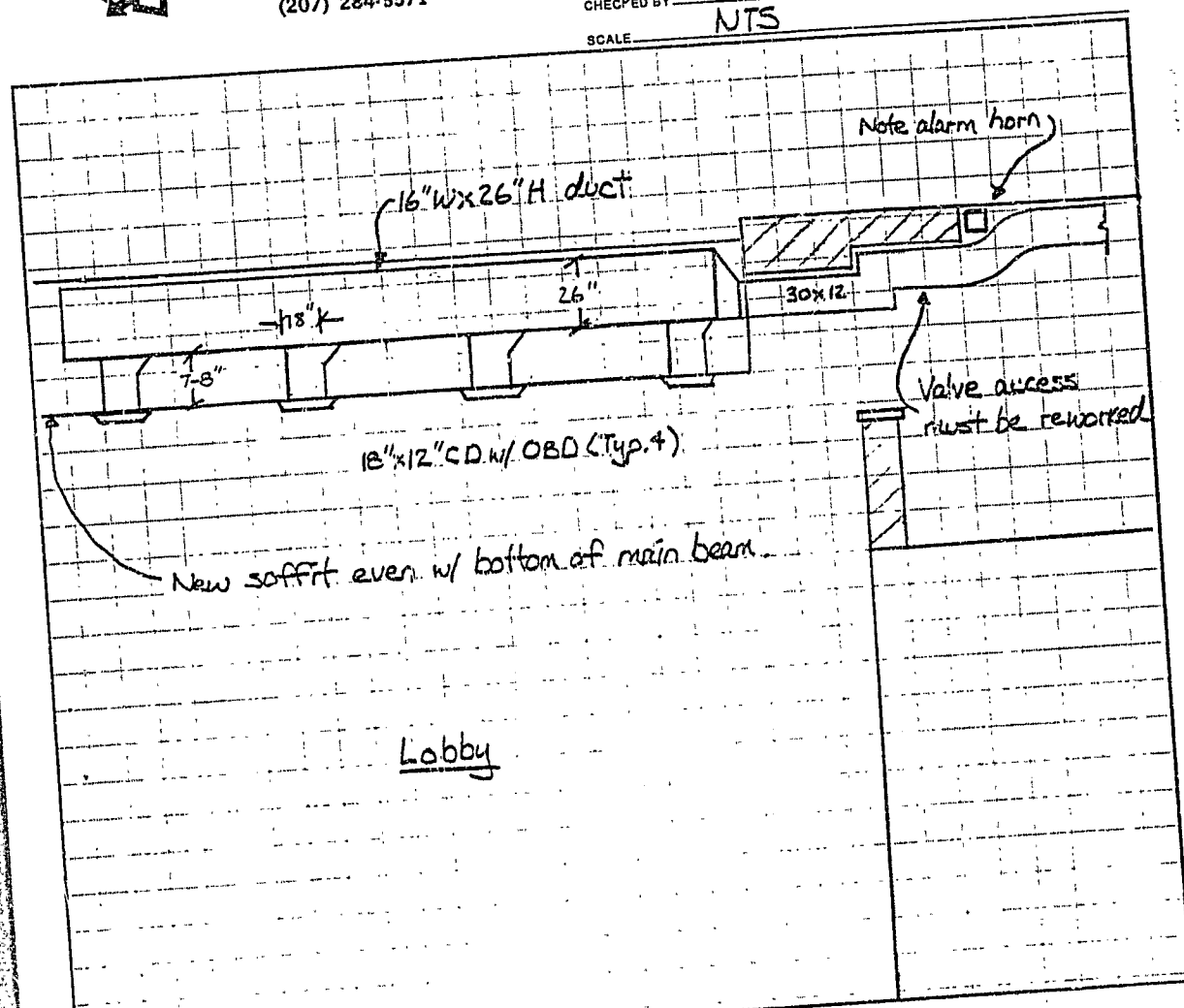

Section - NTS

STATE OF MAINE
BRIAN R. HALEY
#5518
REGISTERED PROFESSIONAL ENGINEER

HALEY'S METAL SHOP INC.
539 Elm Street P.O. Box 565
BIDDEFORD, MAINE 04005
(207) 284-8571

JOB Sonesta Hotel - 1st floor
SHEET NO. 1 OF 3
CALCULATED BY BH DATE 7-5-90
CHECKED BY DATE
SCALE 3/16" = 1'-0"

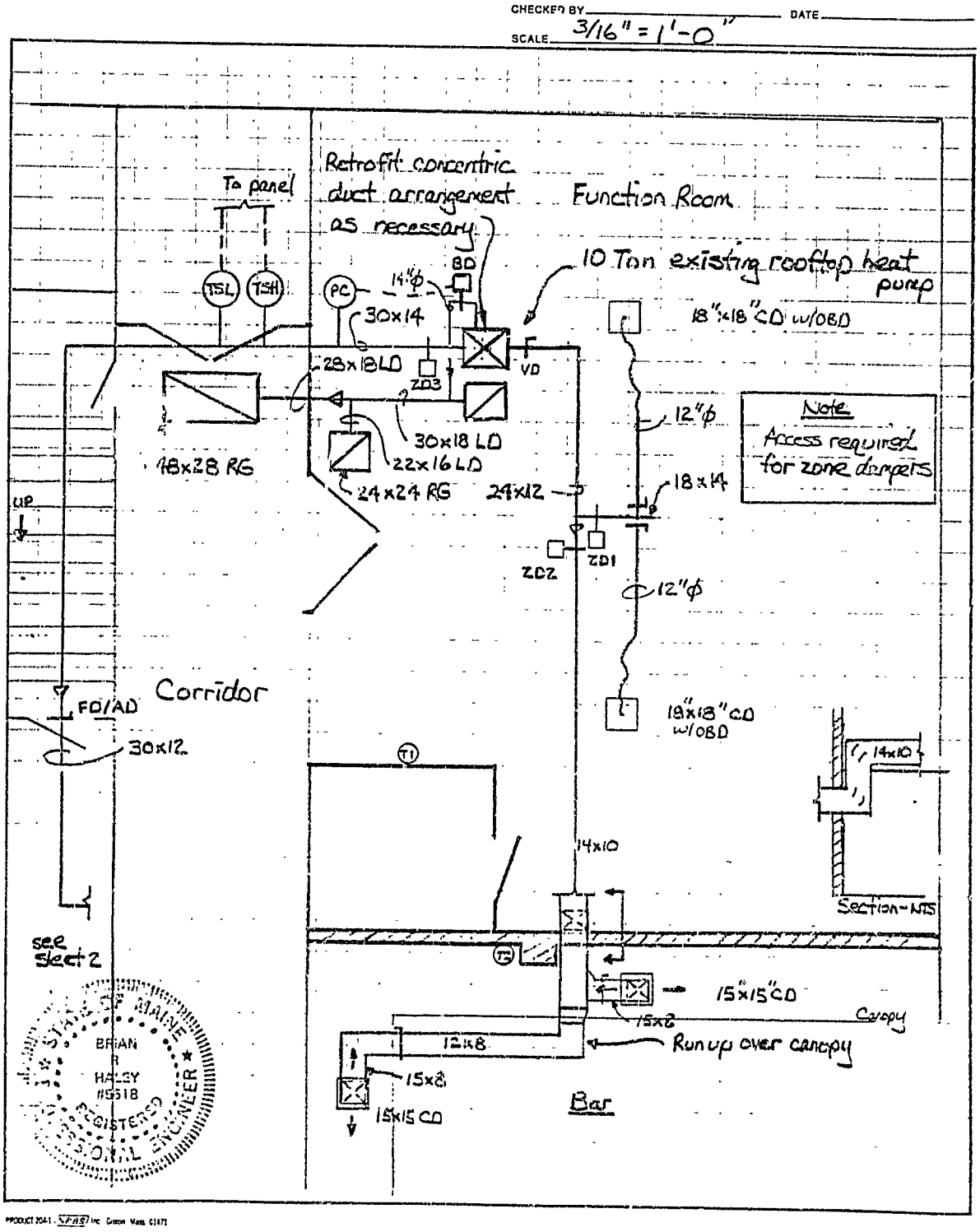

HALEY'S METAL SHOP INC.
539 Elm Street P.O. Box 565
BIDDEFORD, MAINE 04005
(207) 284-3571

JOB Soneste Hotel - Mezzanine Level
SHEET NO. 2 OF 3
CALCULATED BY BH DATE 7-5-90
CHECKED BY DATE
SCALE 3/32" = 1'-0"

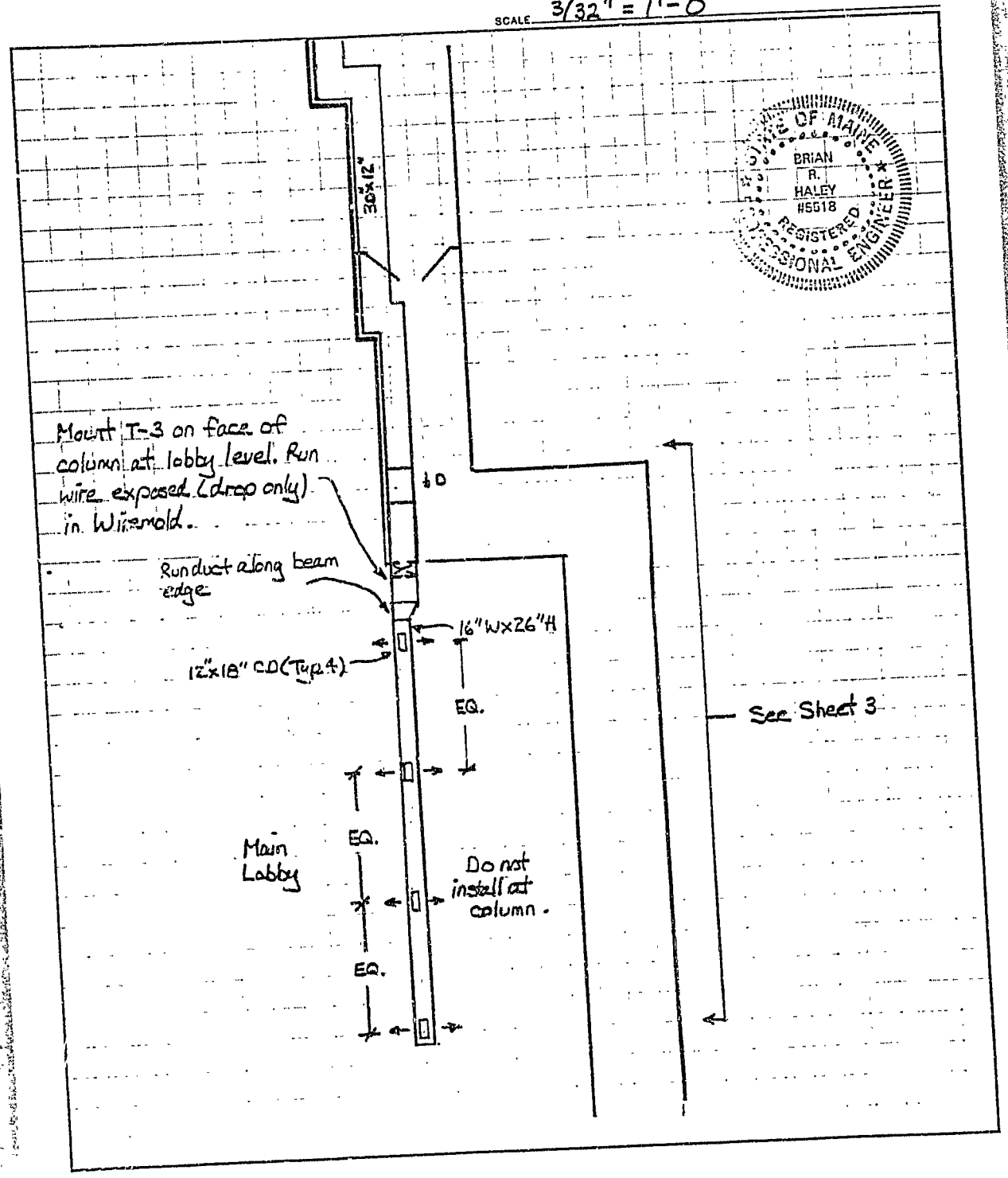

PRODUCT 2041, VERSA Inc. Groton, Mass. 01471

HALEY'S METAL SHOP INC.
539 Elm Street P.O. Box 565
BIDDEFORD, MAINE 04005
(207) 284-8571

JOB Sonesta Hotel
SHEET NO. 3 OF 3
CALCULATED BY BH DATE 7-5-90
CHECKED BY DATE
SCALE NTS

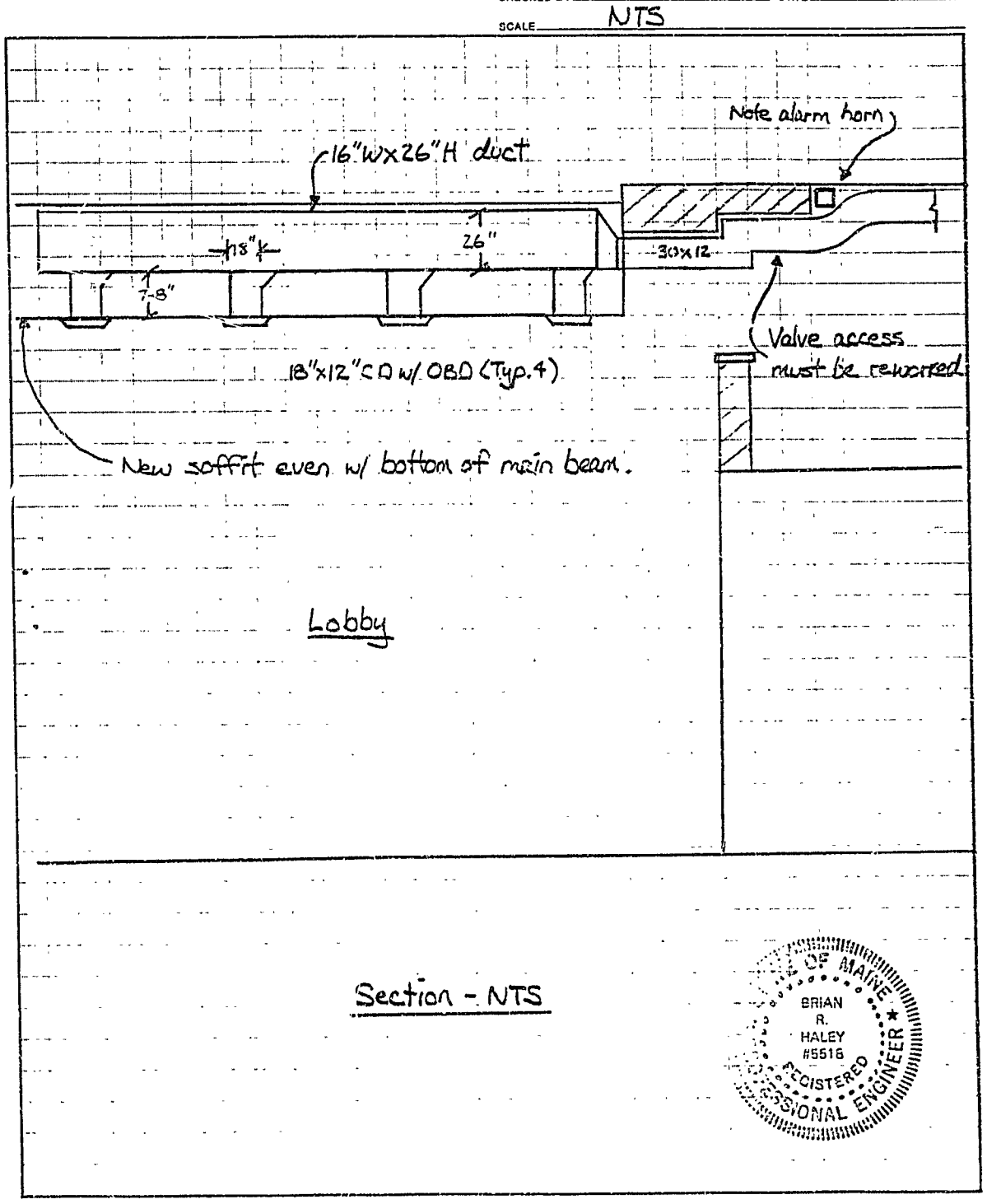

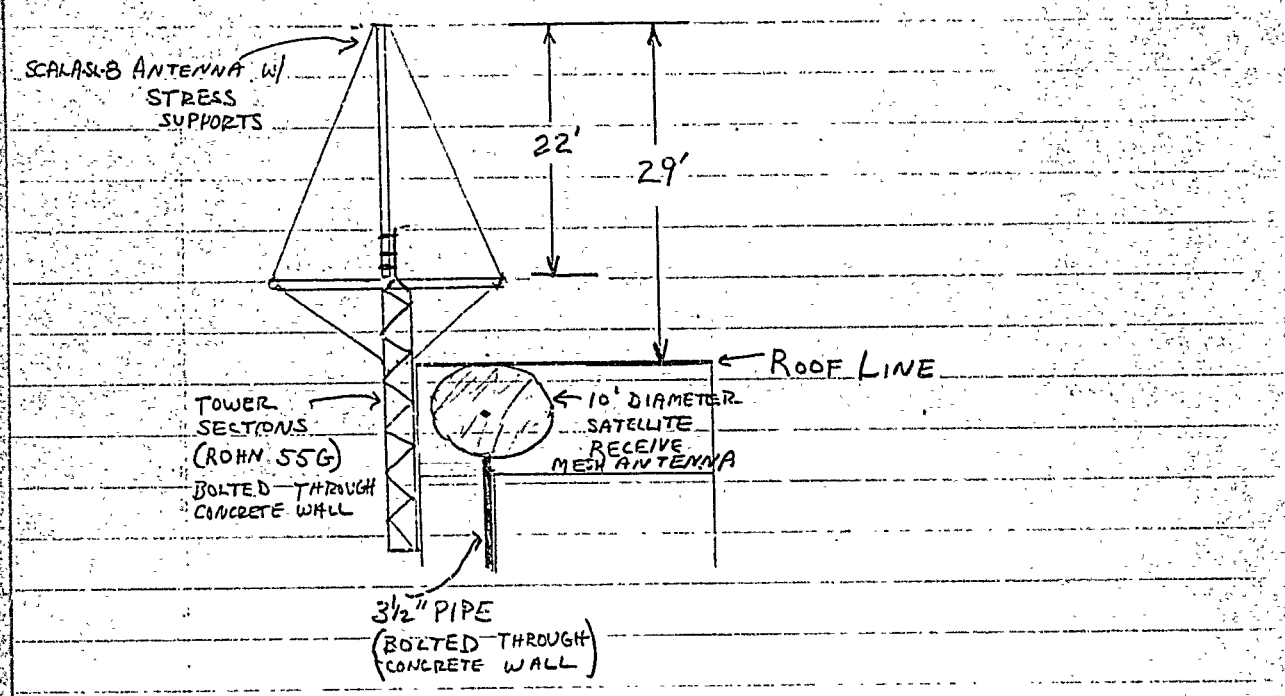

NORTHWEST ROOF OF SONESTA HOTEL
157 HIGH ST
PORTLAND

11-29-88 N. PORTNOY
NTV
POB 446 DTS
PORTLAND, ME 04112
761-2442

NOT TO SCALE

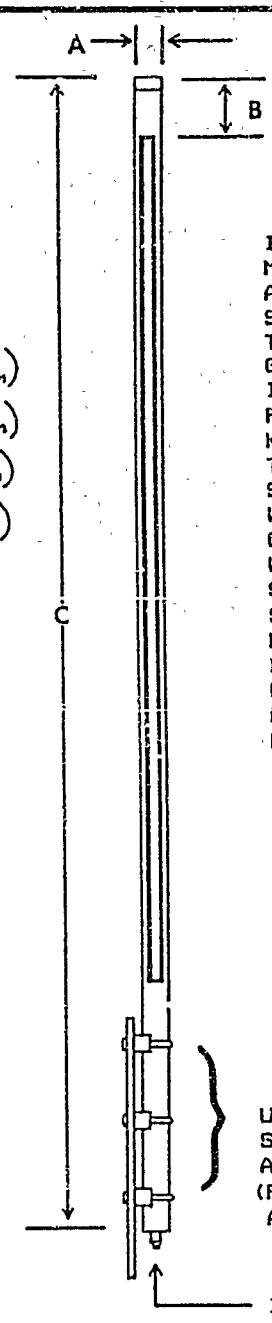

SL-8 DIMENSIONS

CHANNEL: 24

SPACING 'A': 4" (102 mm)

SPACING 'B': 10" (254 mm)

SPACING 'C': 22' (6706 mm)

SPACING 'D': 63 7/16" (1611 mm)

SPACING 'E': 4 9/16" (116 mm)

SPACING 'F': 9/16" (14 mm)

ANTENNA GUYING

IN ORDER TO PROVIDE MAXIMUM RELIABILITY AND SERVICE LIFE, SCALA RECOMMENDS THAT THE SL-8 ANTENNA BE GUYED IN CASES WHERE IT IS TOP-MOUNTED OR FREE STANDING. A GUY KIT IS SUPPLIED WITH THE ANTENNA UNLESS SPECIFICALLY OMITTED WHEN THE ANTENNA IS ORDERED. IN CASES WHERE THE ANTENNA IS SIDE MOUNTED ON THE SUPPORT STRUCTURE, A HORIZONTAL BRACE CAN BE USED FROM THE TOP OF THE ANTENNA TO THE MOUNTING STRUCTURE TO PROVIDE STABILITY AND STRENGTH TO THE INSTALLATION.

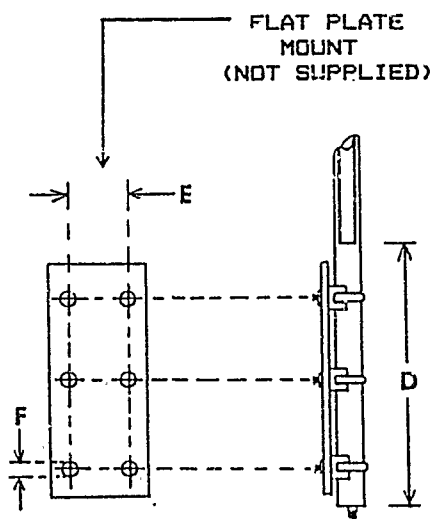

U-BOLTS AND HARDWARE SUPPLIED TO MOUNT ANTENNA ON FLAT SURFACE. (PIPE-TO-PIPE MOUNTS ARE ALSO AVAILABLE)

SCALA
ELECTRONIC CORPORATION
POST OFFICE BOX 4580
MEDFORD, OREGON 97501
(503) 779-6500
TELEX: 151681

SL-8

MOUNTING DIMENSIONS

000753

Permit # _____ City of Portland BUILDING PERMIT APPLIC

Please fill out any part which applies to job. Proper plans must accompany form.

Owner: Sonesta Hotel Phone #

Address: 157 High St; Ptld, ME 04101

LOCATION OF CONSTRUCTION 157 High St.

Contractor: Haley's Metal Sho Phone # 284-8571

Address: 539 Elm St; Biddeford, ME 04005

Proposed Use commercial

Pres. Use commercial

Total Sq. Ft.

Lot Size

Conversion

Side(s)

Spacing 16" O.C.

Spacing

Span(s)

Size

Size

Size

Size

Spacing

Spacing

Spans(s)

Wind Exposure

Yellow-C

USE OF THE 3GWK GUY KIT FOR SCALA SL-8 PARASLOT ANTENNAS

1. GUY TOP PLATE MUST BE INSTALLED ON TOP OF ANTENNA. INSTALL A GUY CABLE ON EACH THIMBLE, SECURE WITH TWO WIRE ROPE CLIPS PER GUY, TIGHTEN SECURELY. CAUTION: OVERTIGHTENING CLIPS MAY CAUSE THEM TO BREAK.

2. INSTALL ANTENNA. HARDWARE FURNISHED WITH SL-8 ALLOWS MOUNTING ON FLAT PLATE. (PIPE-TO-PIPE MOUNTS ALSO AVAILABLE)

3. ANCHOR THE LOWER END OF EACH GUY AT A POINT BELOW LOWER END OF RADIATING SLOT WINDOW. DO NOT USE TURNBUCKLES TO TIGHTEN GUYS. SIMPLY HAND-TIGHTEN TO ELIMINATE SLACK AND SECURE WITH TWO WIRE ROPE CLIPS. THIS GUY KIT IS DESIGNED TO PREVENT ANTENNA SWAY AND THE EVENTUAL FATIGUE WHICH SUCH SWAY COULD CAUSE.

4. FOR TOWER OR POLE-TOP INSTALLATIONS, USE SPREADER ARMS AND RETURN LOWER END OF GUYS TO TOWER OR POLE AND SECURE AS ABOVE.

5. IT IS IMPORTANT THAT THE ANTENNA STRUCTURE BE CAREFULLY GROUNDED TO MINIMIZE THE POSSIBILITY OF LIGHTNING OR STATIC DAMAGE. USE AN ADEQUATE GROUND SYSTEM, DO NOT DEPEND ON THE COAXIAL CABLE TO PROVIDE THIS GROUND.

EACH 3GWK GUY KIT INCLUDES:

* 3/16" WIRE ROPE (FOR LENGTH SEE CHART BELOW)
* GUY TOP PLATE (USUALLY INSTALLED ON ANTENNA AT FACTORY)
* THREE 3/16" THIMBLES USUALLY INSTALLED ON PLATE AT FACTORY)
* TWELVE 3/16" WIRE ROPE CLIPS

CHANNEL	LENGTH OF SCA. GUY	TOTAL LENGTH SUPPLIED
14-22	40 FEET	120 FEET
27-43	33 FEET	99 FEET
44-65	30 FEET	90 FEET
66-83	25 FEET	75 FEET

SEE ATTACHED INSTRUCTIONS FOR SUGGESTED INSTALLATION PLAN

NOTE: THE SL-8 HAS AN OFFSET OMNIDIRECTIONAL PATTERN. THE ANTENNA SHOULD BE ORIENTED SO THAT THE SLOT AREA IS FACING IN THE DIRECTION WHERE MAXIMUM RADIATION IS DESIRED.

SCALA
ELECTRONIC CORPORATION
POST OFFICE BOX 4580
MEDFORD, OREGON 97501
(503) 779-6500
TELEX: 151681

SL-8 GUY KIT

INSTALLATION INSTRUCTIONS

CITY OF PORTLAND, MAINE
389 CONGRESS STREET
PORTLAND, MAINE 04101
(207) 874-8300

P. SAMUEL HOFFSES, CHIEF
INSPECTION SERVICES DIVISION

DEPARTMENT OF PLANNING & URBAN DEVELOPMENT

June 22, 1990

M.H.N. Corporation
Sonesta Hotel
157 High Street
Portland, ME 04101

Dear Sir:

During a recent routine health inspection, I noted a number of rips in the covering of asbestos treated pipes. These areas should be checked to determine the condition of the asbestos by a State licensed firm.

Given the proximity of the new banquet room adjacent to the asbestos, exercise extra care in the maintenance of the basement area.

Please send a copy of your findings to this department, Room 315, c/o of myself.

If I may be of assistance, please call.

Sincerely,

Mark Mitchell

Mark Mitchell
Maintenance Officer

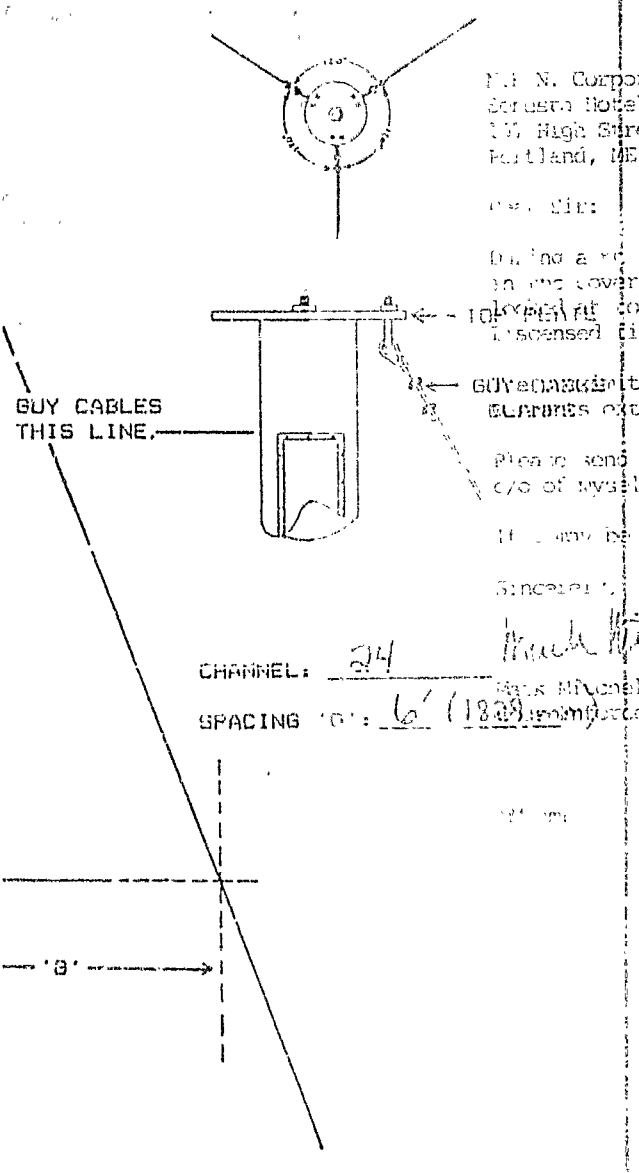

CHANNEL: 24

SPACING 'B': 6' (183)

SL-8

GUY KIT INSTALLATION