HOOD INFORMATION – Job#1891896

HOOD NO.	TAG	MODEL	LENGTH	MAX. COOKING TEMP.	EXHAUST PLENUM						TOTAL SUPPLY CFM	HOOD CONSTRUCTION	HOOD CONFIG.	
					TOTAL EXH. CFM	RISER(S)							END TO END	ROW
						WIDTH	LENG.	DIA.	CFM	S.P.				
1	20" Wide Supply	206 MISC-PSP	6' 0.00"	300 Deg.	0						1050	430 SS 100%	ALONE	ALONE

HOOD INFORMATION

HOOD NO.	TAG	FILTER(S)				LIGHT(S)			UTILITY CABINET(S)					FIRE SYSTEM PIPING	HOOD HANGING WGHT
		TYPE	QTY.	HEIGHT	LENGTH	QTY.	TYPE	WIRE GUARD	LOCATION	FIRE SYSTEM		ELECTRICAL	SWITCHES		
										TYPE	SIZE	MODEL #	QUANTITY		
1	20" Wide Supply					0								NO	74 LBS

PERFORATED SUPPLY PLENUM(S)

HOOD NO.	TAG	POS.	LENGTH	WIDTH	HEIGHT	TYPE	RISER(S)				
							WIDTH	LENG.	DIA.	CFM	S.P.
1	20" Wide Supply	Front	72"	20"	6"	MUA	12"	20"		525	0.151"
						MUA	12"	20"		525	0.151"

Reviewed for Code Compliance
Inspections Division
Approved with Conditions

Date: 01/04/14

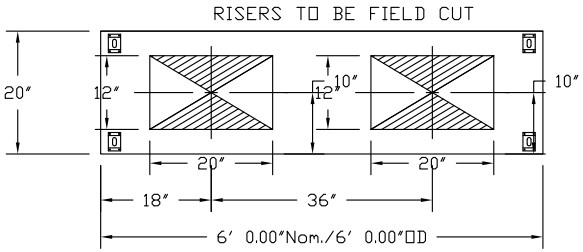

PLAN VIEW – Hood #1 (20" Wide Supply)
6' 0.00" LONG 206MISC-PSP

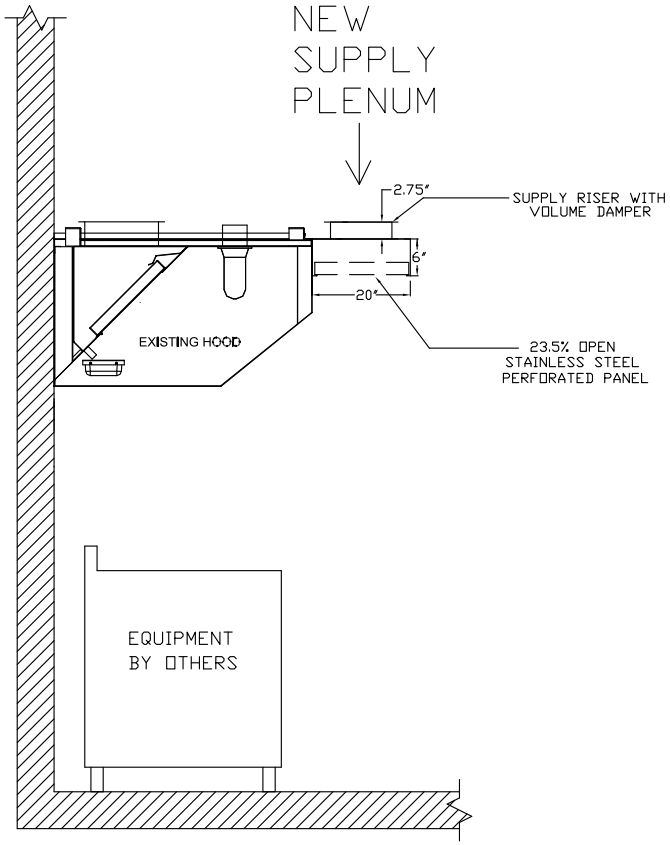

SECTION VIEW - EXISTING HOOD WITH NEW PSP ACCESSORY

CUSTOMER APPROVAL TO MANUFACTURE:

Approved as Noted ☐
Approved with NO Exception Taken ☐
Revise and Resubmit ☐
SIGNATURE _____
Your Title _____ Date _____

CAPTIVEAIRE

JOB West End Deli	
LOCATION SCARBOROUGH, ME	
DATE 12/4/2013	JOB # 1891896
DWG # 1	DRAWN BY BFC-21
REV.	SCALE 3/8" = 1'-0"

EXHAUST FAN INFORMATION – Job#1891896

FAN UNIT NO.	TAG	FAN UNIT MODEL #	CFM	ESP.	RPM	H.P.	ø	VOLT	FLA	WEIGHT (LBS.)	SONES
1		NCA14FA	1500	1.000	1139	0.750	1	115	11.0	150	12.8

MUA FAN INFORMATION – Job#1891896

FAN UNIT NO.	TAG	FAN UNIT MODEL #	BLOWER	HOUSING	CFM	ESP.	RPM	H.P.	ø	VOLT	FLA	WEIGHT (LBS.)	SONES
2		A1-G10	G10D	A1	1050	0.300	664	0.500	1	115	6.8	214	11.3

FAN OPTIONS

FAN UNIT NO.	TAG	OPTION (Qty. - Descr.)
1		1 - Grease Box
		1 - Fan Base Ceramic Seal - For Grease Ducts
		1 - Hinge Kit - Ships Loose for Curb Supplied by Others
2		1 - Gravity Backdraft Damper for Size 1 Housing

CURB ASSEMBLIES

NO.	ON FAN	WEIGHT	ITEM	SIZE
2	# 2	29 LBS	Curb	21.000"W x 21.000"L x 20.000"H

FAN ACCESSORIES

FAN UNIT NO.	TAG	EXHAUST			SUPPLY			
		GREASE CUP	GRAVITY DAMPER	WALL MOUNT	SIDE DISCHARGE	GRAVITY DAMPER	MOTORIZED DAMPER	WALL MOUNT
1		YES						
2						YES		

Reviewed for Code Compliance
Inspections Division
Approved with Conditions

Date: 01/04/14

FAN #1 NCA14FA - EXHAUST FAN

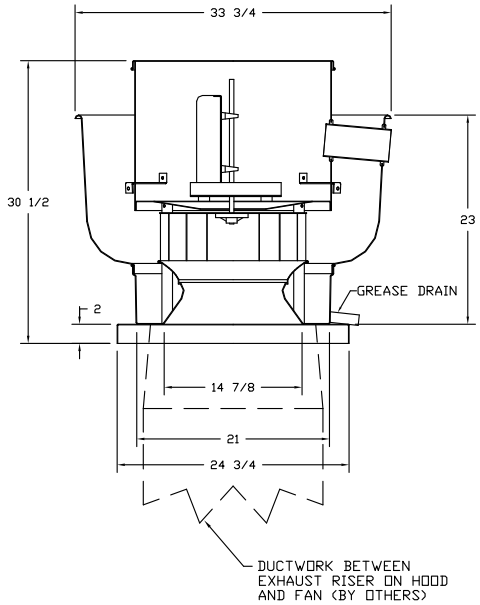

FEATURES:

- ROOF MOUNTED FANS
- RESTAURANT MODEL
- UL705 AND UL762
- AMCA SOUND AND AIR CERTIFIED
- WIRING FROM MOTOR TO DISCONNECT SWITCH
- WEATHERPROOF DISCONNECT
- HIGH HEAT OPERATION 300°F (149°C)
- GREASE CLASSIFICATION TESTING

NORMAL TEMPERATURE TEST
EXHAUST FAN MUST OPERATE CONTINUOUSLY WHILE EXHAUSTING AIR AT 300°F (149°C) UNTIL ALL FAN PARTS HAVE REACHED THERMAL EQUILIBRIUM, AND WITHOUT ANY DETERIORATING EFFECTS TO THE FAN WHICH WOULD CAUSE UNSAFE OPERATION.

ABNORMAL FLARE-UP TEST
EXHAUST FAN MUST OPERATE CONTINUOUSLY WHILE EXHAUSTING BURNING GREASE VAPORS AT 600°F (316°C) FOR A PERIOD OF 15 MINUTES WITHOUT THE FAN BECOMING DAMAGED TO ANY EXTENT THAT COULD CAUSE AN UNSAFE CONDITION.

OPTIONS

GREASE BOX
FAN BASE CERAMIC SEAL - FOR GREASE DUCTS
HINGE KIT - SHIPS LOOSE FOR CURB SUPPLIED BY OTHERS

CUSTOMER APPROVAL TO MANUFACTURE:

Approved as Noted ☐
Approved with NO Exception Taken ☐
Revise and Resubmit ☐
SIGNATURE _____
Your Title _____ Date _____

JOB West End Deli	
LOCATION SCARBOROUGH, ME	
DATE 12/4/2013	JOB # 1891896
DWG # 2	DRAWN BY BFC-21
REV.	SCALE 3/8" = 1'-0"

FAN #2 A1-G10 - SUPPLY FAN
1. DIRECT DRIVE DIRECT DRIVE UNTEMPERED SUPPLY UNIT WITH 10" BLOWER IN SIZE #1 HOUSING WITH SPEED CONTROL, DISCONNECT SWITCH.
2. INTAKE HOOD WITH EZ FILTERS-LOW CFM
3. DOWN DISCHARGE - AIR FLOW RIGHT -> LEFT
4. GRAVITY BACK DRAFT DAMPER, 16" WIDE X 18" HIGH, STANDARD GALVANIZED CONSTRUCTION, 1 1/4" REAR FLANGE, FOR SIZE 1 UNTEMPERED FAN HOUSING (5181)

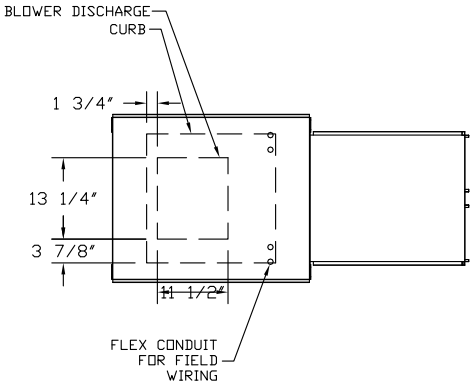

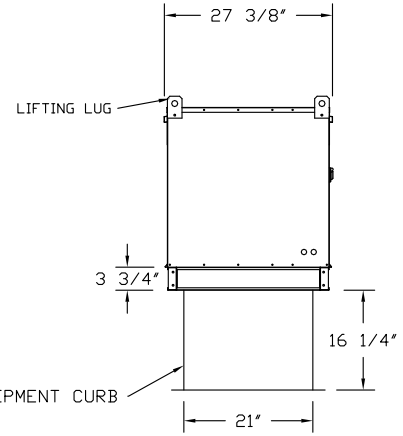

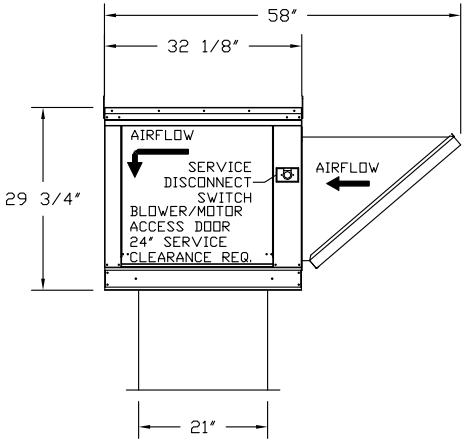

ROOF OPENING 2" SMALLER THAN CURB DIMENSION.

Reviewed for Code Compliance
Inspections Division
Approved with Conditions

Date: 01/04/14

CUSTOMER APPROVAL TO MANUFACTURE:

Approved as Noted ☐
Approved with NO Exception Taken ☐
Revise and Resubmit ☐
SIGNATURE _____
Your Title _____ Date _____

CAPTIVEAIRE

JOB West End Deli	
LOCATION SCARBOROUGH, ME	
DATE 12/4/2013	JOB # 1891896
DWG # 3	DRAWN BY BFC-21
REV.	SCALE 3/8" = 1'-0"

ELECTRICAL PACKAGES – Job#1891896

NO.	TAG	PACKAGE #	LOCATION	SWITCHES		OPTION	FANS CONTROLLED				
				LOCATION	QUANTITY		TYPE	ø	H.P.	VOLT	FLA
1		11111002	Wall Mount In SS Box	SS Wall Mount Box	1 Light 1 Fan	Exhaust in Fire	Exhaust	1	0.750	115	11.0
							Supply	1	0.500	115	6.8

DETAIL OF REMOTE S/S BOX

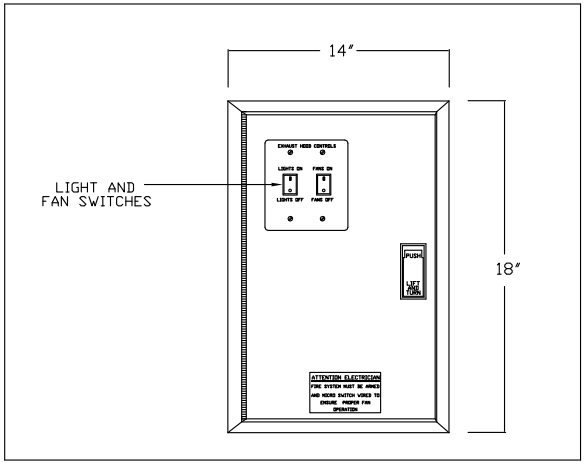

Reviewed for Code Compliance
Inspections Division
Approved with Conditions

Date: 01/04/14

CUSTOMER APPROVAL TO MANUFACTURE:

Approved as Noted ☐
Approved with NO Exception Taken ☐
Revise and Resubmit ☐
SIGNATURE _____
Your Title _____ Date _____

BUILT IN ACCORDANCE WITH NFPA No. 96

CAPTIVEAIRE

JOB West End Deli	
LOCATION SCARBOROUGH, ME	
DATE 12/4/2013	*JOB #* 1891896
DWG # 4	*DRAWN BY* BFC-21
REV.	*SCALE* 3/8" = 1'-0"

Exhaust Fan Wiring	JOB 1891896 - West End Deli	
DRAWING NUMBER EXH1891896-1	SHIP DATE 12/4/2013	MODEL NCA14FA

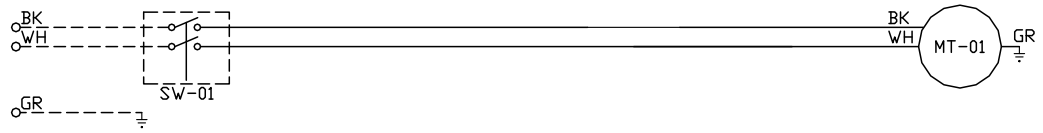

Installed Options

Component Identification

Label	Description	Location
MT-01	Fan Motor	[2]
SW-01	Main disconnect switch	[2]

MOTOR INFO

EXHAUST 0.75HP-115V-1P-11.0FLA

ELECTRICAL INFORMATION

MOTOR/CONTROL MCA: 13.8A
MOTOR/CONTROL MOP: 20A

Date: 01/04/14

Reviewed for Code Compliance
Inspections Division
Approved with Conditions

CITY OF PORTLAND, MAINE

AirHandler Wiring	JOB 1891896 - West End Deli	
DRAWING NUMBER A1891896-2	SHIP DATE 12/4/2013	MODEL A1-G10

!ATTENTION ELECTRICIAN!
DROP FOR DISCONNECT CONNECTION IS FACTORY SUPPLIED
CONNECT POWER TO THE DROP

Installed Options

Component Identification

Label	Description	Location
MT-01	Supply motor	[2]
SC-01	Speed Control	[1]
SW-01	Main disconnect switch	[2]

MOTOR INFO

SUPPLY 0.5HP-115V-1P-6.8FLA

ELECTRICAL INFORMATION
MOTOR/CONTROL CIRCUIT MCA: 8.5A
MOTOR/CONTROL CIRCUIT MOP: 15A

Date: 01/04/14

Reviewed for Code Compliance
Inspections Division
Approved with Conditions

CITY OF PORTLAND, MAINE
RESURGAM

ELECTRICAL PREWIRE PACKAGE	JOB NAME *West End Deli*	DATE *12/4/2013*
DRAWING NUMBER *11111002*	JOB NUMBER *1891896*	DRAWN BY

CONTROL INPUT 120VAC H1=LINE, N1=NEUTRAL 15A BKR – DO NOT WIRE TO SHUNT TRIP BREAKER

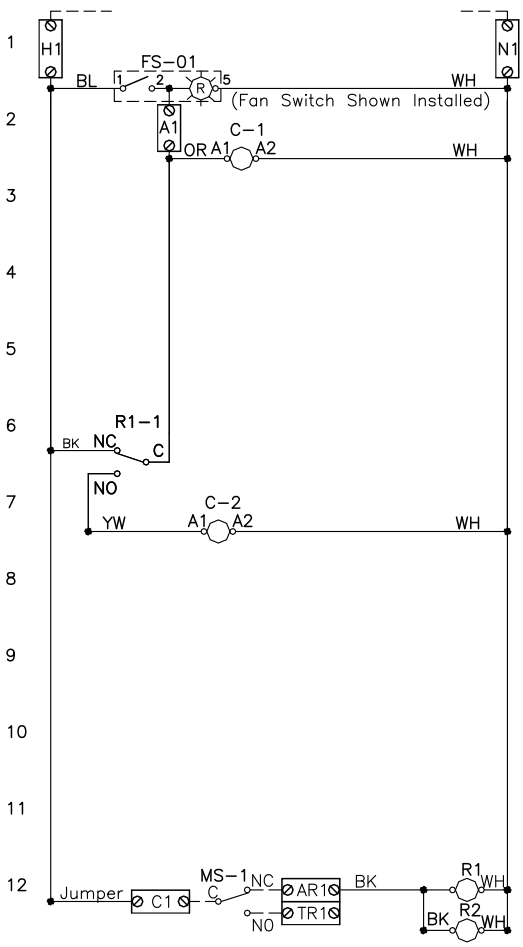

LIGHT INPUT 120VAC H2–H5=LINE, N2–N5=NEUTRAL 15A BKR (MAX 1400W PER CIRCUIT)

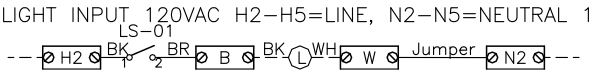

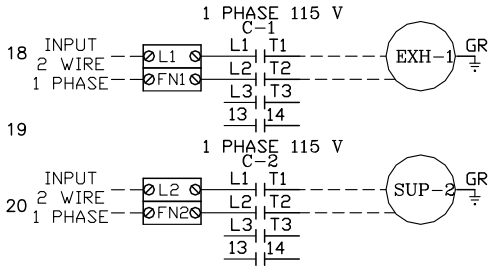

120V/1Ph, W/ 1 Exhaust Fan, 1 Supply Fan, Exhaust in Fire

COMPONENT PARTS LIST

LABEL	DESCRIPTION
C–x	Contactor
ST–x	Starter
OL–x	Overload
FS–xx	Fan Switch (Lighted)
LS–xx	Light Switch
L	Hood Light(s)
MS–x	MicroSwitch (Ansul/PyroChem)
Rx	Relay DPDT – 34.110.0184.0 + Socket

SPARE FIRE DRY CONTACTS

SPARE RELAY CONTACTS USED WHEN FIRE SYSTEM DISCHARGES TO SHUT DOWN EQUIPMENT OR PROVIDE SIGNALS. (NOT FOR BUILDING FIRE ALARM)

TR: Tripped, AR: Armed, C: Common

Rx RELAY SOCKET STYLE "CLION"

C–RD	NO	4	3
NO–BL	NC	2	1
NC–PR	COIL	8	7
	COM	6	5

MS–x MicroSwitch
C–RD
NO–BK
NC–BR

MOTOR	TAG	PH	VLT	HP	FLA	BRK
EXH-1		1	115	0.75	11.0	15A
SUP-2		1	115	0.50	6.8	15A

NOTES

----- DENOTES FIELD WIRING
——— DENOTES INTERNAL WIRING

WIRE COLOR

BK – Bl
BL – Bl
BR – Bl
OR – Ol
RD – Rl
WH – W

DRAWING
NOTE: IF
INSTALLE
TERMINA
BE FIELI

14 x

Date: 01/04/14

Reviewed for Code Compliance
Inspections Division
Approved with Conditions

CITY OF PORTLAND, MAINE

CONTROL PANEL INSTALLATION	JOB NAME West End Deli	DATE 12/4/2013
DRAWING NUMBER 11111002	JOB NUMBER 1891896	DRAWN BY

HOOD TO CONTROL PANEL

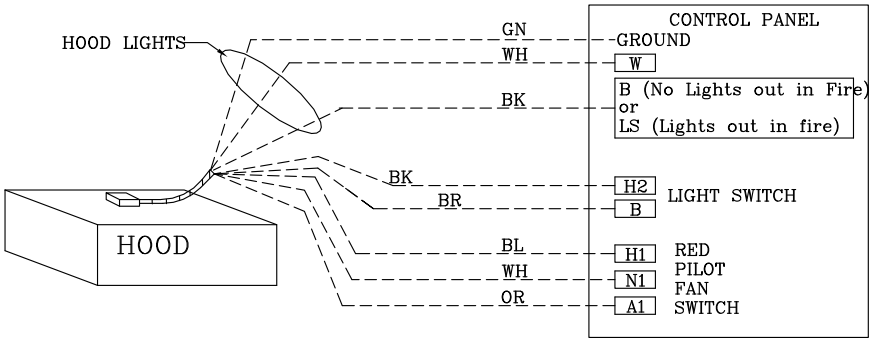

Light switch and fan switch mounted on the face of the hood and control panel mounted separately then field wire to the control panel as shown.

POWER FEED FOR CONTROLS AND LIGHTING

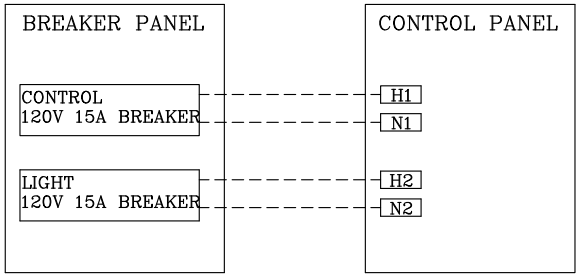

FIELD WIRED SWITCHES TO CONTROL PANEL

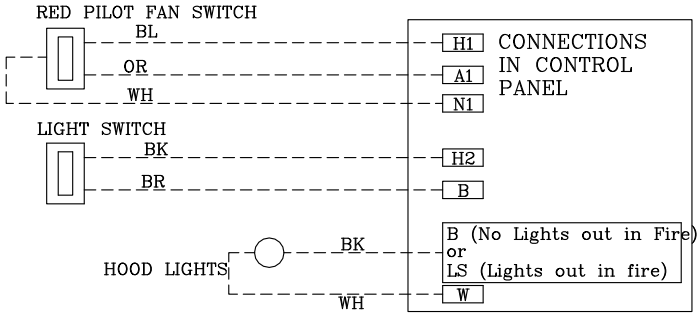

FIRE SYSTEM MICROSWITCH WIRING TO CONTROL PANEL

120VAC SHUNT TRIP BREAKER WIRING

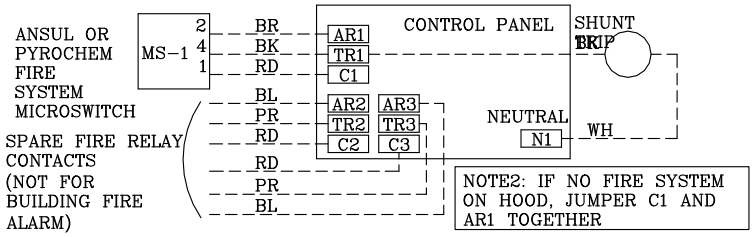

NOTE2: IF NO FIRE SYSTEM ON HOOD, JUMPER C1 AND AR1 TOGETHER

NOTE1: BUILDING FIRE ALARM IS TO BE WIRED TO THE "ALARM INITIATING SWITCH" INSIDE THE FIRE SYSTEM AUTOMAN

MICRO-SWITCHES WIRING WHEN MULTIPLE FIRE SYSTEMS CONNECTED TO ONE ELECTRICAL PANEL (3 SHOWN HERE)

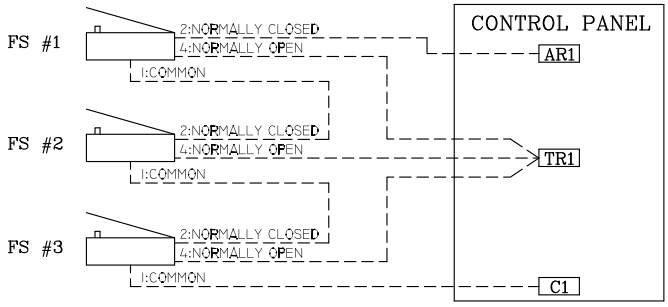

FAN WIRING TO CONTROL PANEL

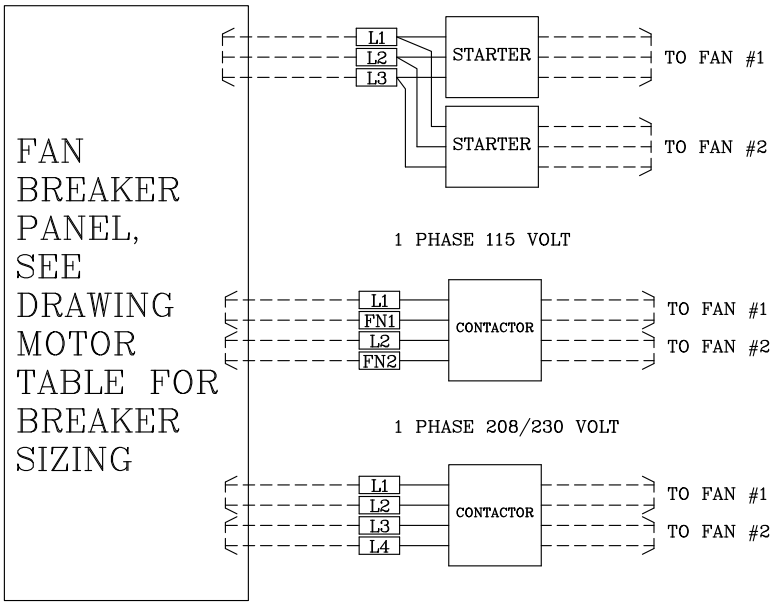

ELECTRIC GAS VALVE WITH RESET RELA

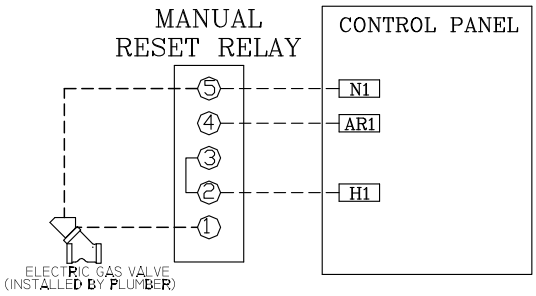

NOTES

BK -
BL -
BR -
OR -
RD -
WH -
GN -

Date: 01/04/14

Reviewed for Code Compliance
Inspections Division
Approved with Conditions

CITY OF PORTLAND, MAINE