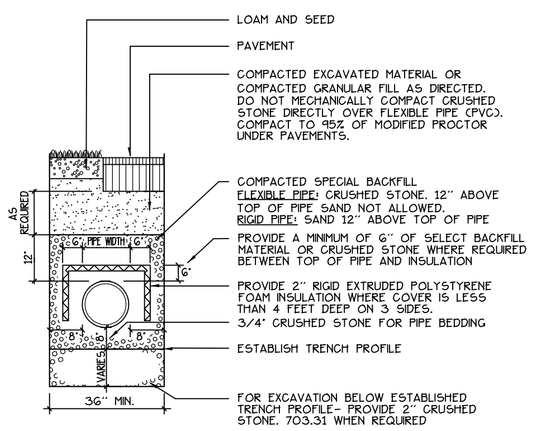

NOTES:

ANY ALTERNATE TRENCHING METHODS SHALL BE APPROVED IN ADVANCE BY THE CITY.

ALL TRENCH DIMENSIONS SHALL BE IN CONFORMANCE WITH THE CITY OF PORTLAND'S DETAIL FIGURE 11-13 OF THE TECHNICAL AND DESIGN STANDARDS AND GUIDELINES.

1/8 PIPE TRENCH DETAIL
NOT TO SCALE

NOTE: GRATE AND COVER TO CONFORM TO CITY OF PORTLAND DESIGN STANDARDS.

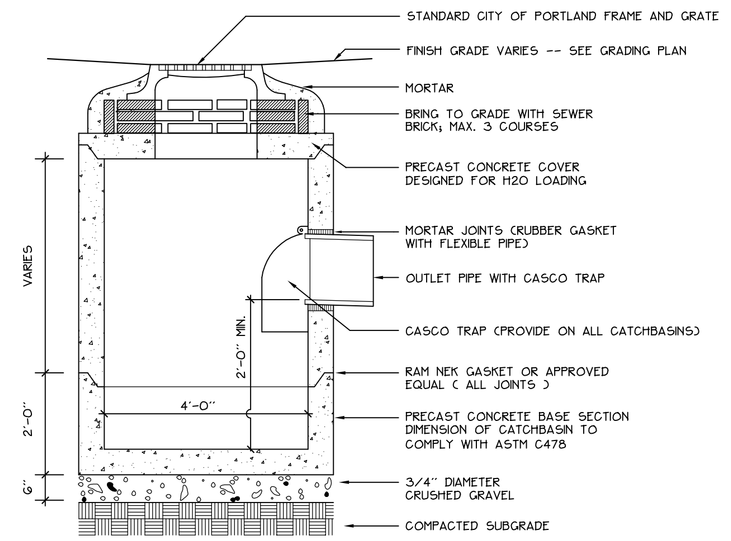

4/8 PRECAST CONCRETE CATCHBASIN WITH CASCO TRAP
NOT TO SCALE

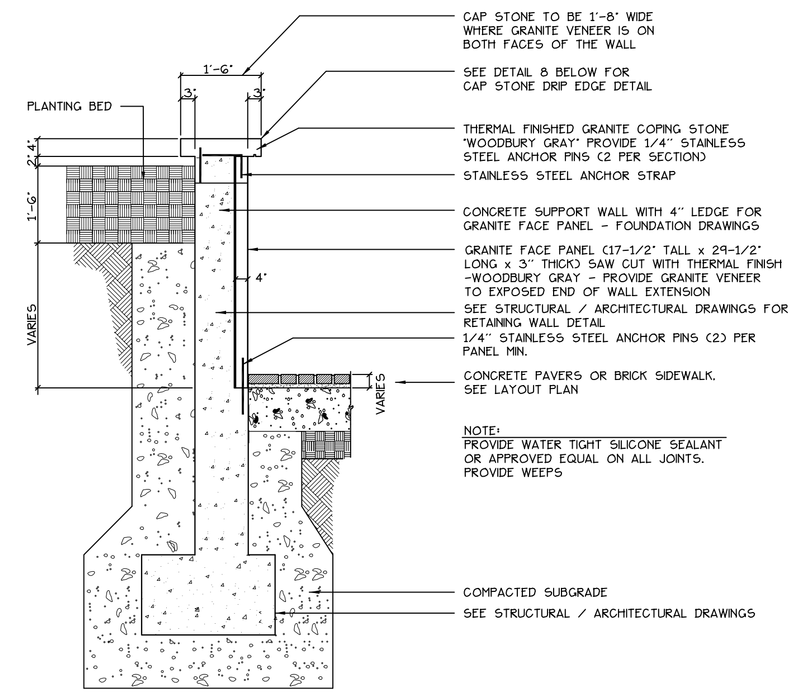

7/8 GRANITE RETAINING WALL DETAIL
NOT TO SCALE

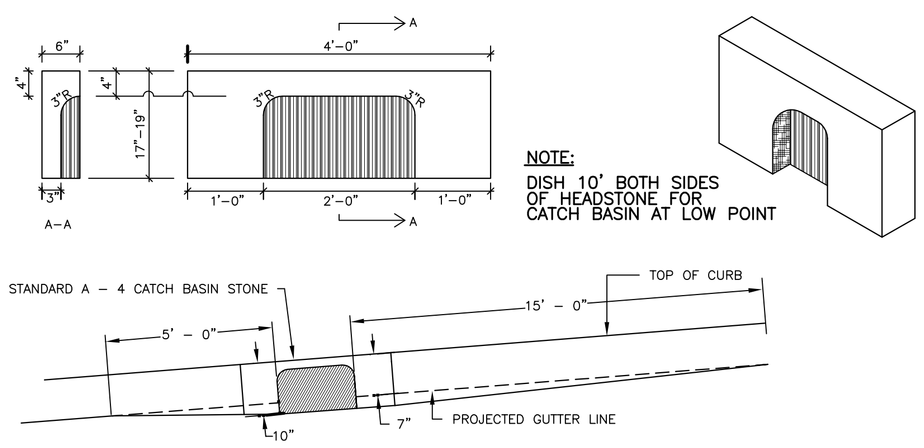

NOTE:
DISH 10' BOTH SIDES OF HEADSTONE FOR CATCH BASIN AT LOW POINT

TYPICAL PAVEMENT GRADING ON SLOPES FOR CATCH BASIN AND INLET

2/8 GRANITE INLET STONE
NOT TO SCALE

NOTE: SET BACK SHALL CONFORM TO M.D.O.T. POLICY FOR ABOVE GROUND UTILITY LOCATIONS TYPICALLY 3 FT FROM EDGE OR SHOULDER OF 1 FT FROM FACE OF CURB. CONFIRM WITH THE PORTLAND WATER DISTRICT.

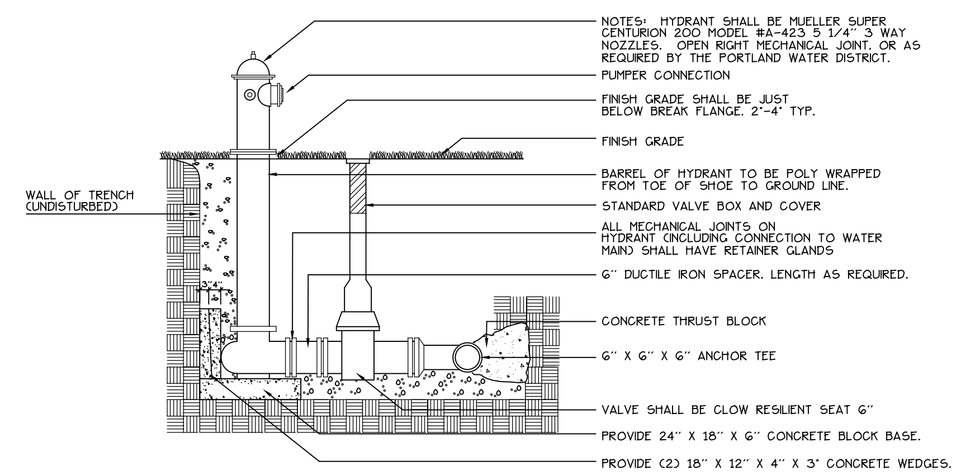

5/8 FIRE HYDRANT
NOT TO SCALE

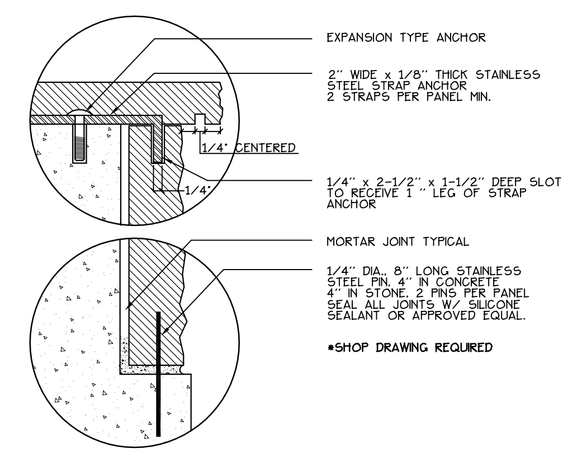

8/8 GRANITE CAP STONE AND VENEER ATTACHMENT DETAIL
NOT TO SCALE

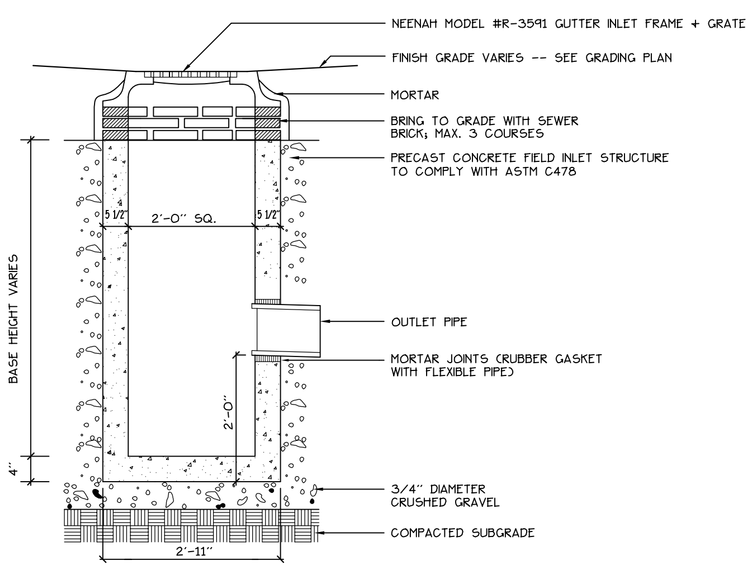

3/8 DRAIN INLET
NOT TO SCALE

NOTES: PLUG ALL LIFTING HOLES. JOINT SECTIONS AND INSIDE MANHOLE BOOT WITH NON-SHRINK GROUT.

MANHOLE CHANNELS REQUIRING CHANGE IN ALIGNMENT, TO BE BUILT ON SMOOTH RADIUS. IF SIDE PIPES ENTER, CHANNEL TO BE SHAPED TO RECEIVE ADDED SIDE FLOW.

PRECAST REINFORCED CONCRETE BARREL SECTION. MATCH 1'-0" - 4'-0" LENGTH TO MEET FIELD CONDITIONS.

CUT BACK PIPE TO MANHOLE I.D.

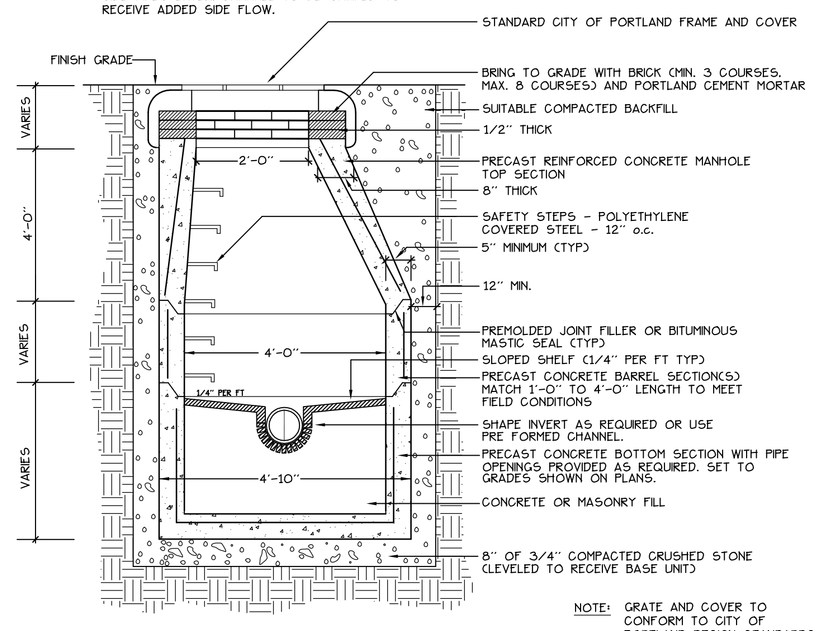

NOTE: GRATE AND COVER TO CONFORM TO CITY OF PORTLAND DESIGN STANDARDS.

6/8 PRECAST CONCRETE MANHOLE
NOT TO SCALE

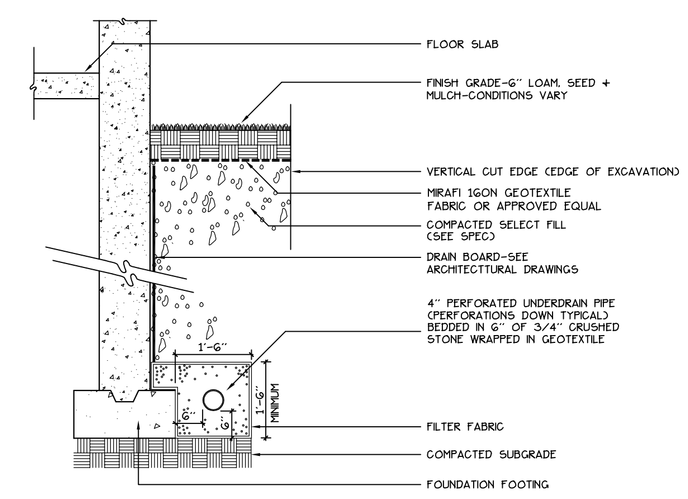

9/8 FOUNDATION UNDERDRAIN
NOT TO SCALE

Prepared For:

Owner/Applicant:
WATERVIEW DEVELOPMENT LLC
477 Congress Street, Suite 111
Portland, Maine 04101
Tel: (207) 773-3477

Prepared By:

MITCHELL & ASSOCIATES
Landscape Architects
The Staples School
70 Center Street
Portland, Maine 04101
Tel: (207) 774-4427

THE WATERVIEW AT BAYSIDE CONDOMINIUM

409 Cumberland Avenue Portland, Maine

Date: APRIL 29, 2005

Revisions:

Reproduction or reuse of this document without the expressed written consent of Mitchell & Associates is prohibited.

Title: SITE DETAILS

Scale:

North:

Sheet No.: 8

ISSUED FOR FOUNDATION PERMITTING & PRICING - JULY 15, 2005