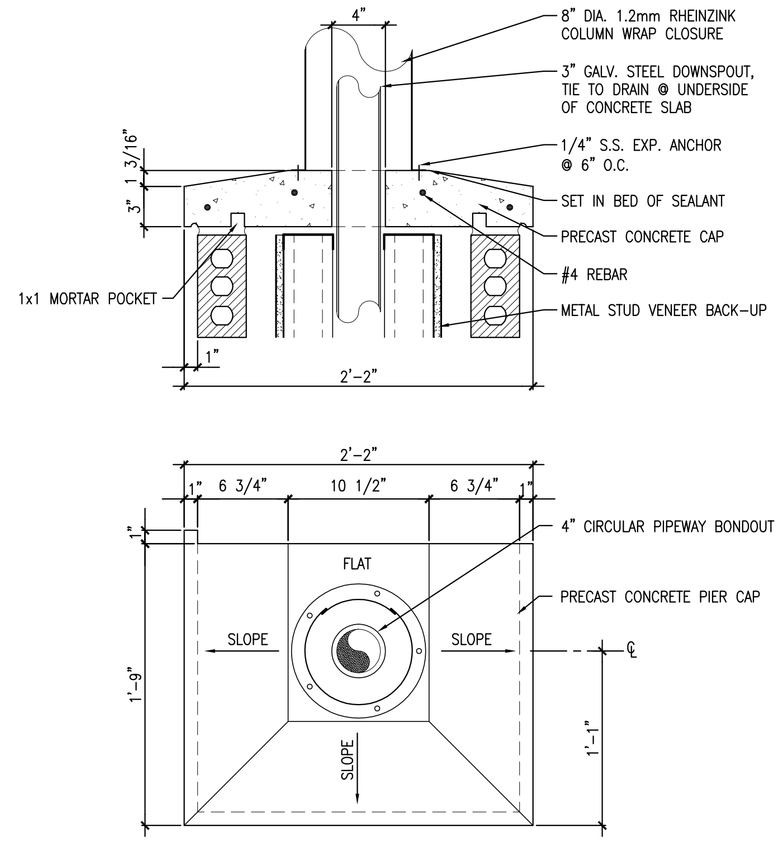

1 PRECAST CONC. CAP DETAIL @ DOWNSPOUT ENCLOSURE

REFERENCED FROM: SCALE:

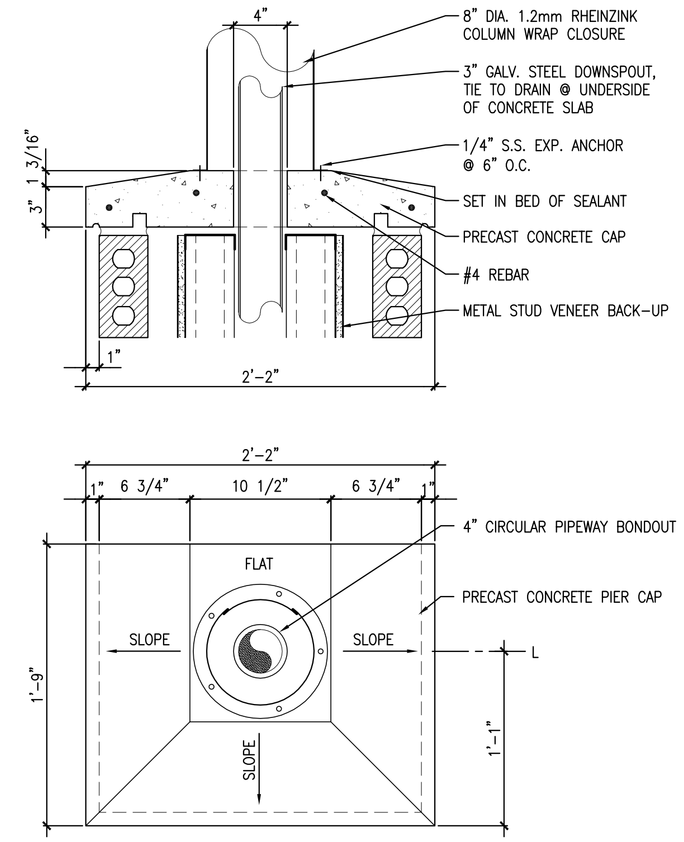

2 PRECAST CONC. CAP DETAIL @ DOWNSPOUT ENCLOSURE

REFERENCED FROM: SCALE: 1 1/2" = 1'-0"

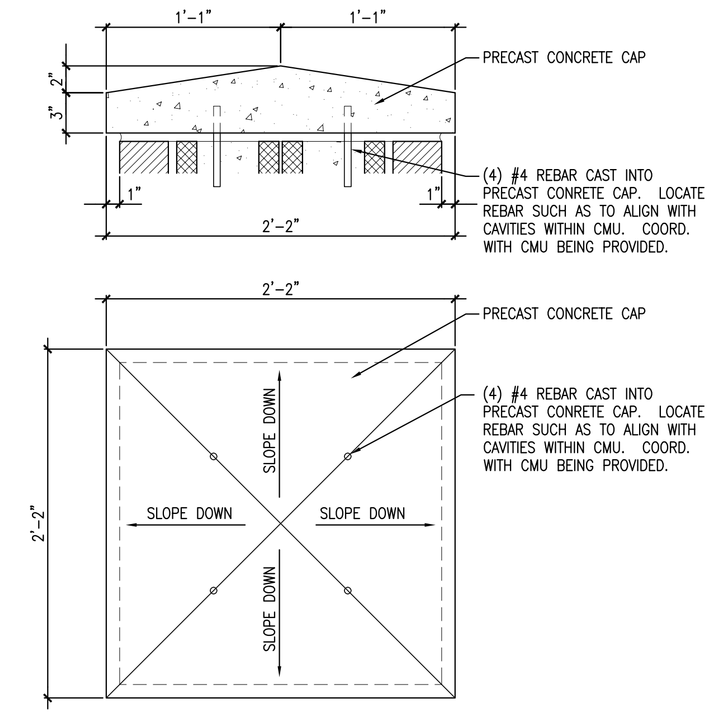

3 DETAIL @ PRECAST CONCRETE PATIO PIER CAP 4

REFERENCED FROM: SCALE: 1 1/2" = 1'-0"

4 NOT USED

REFERENCED FROM: SCALE:

5 NOT USED

REFERENCED FROM: SCALE:

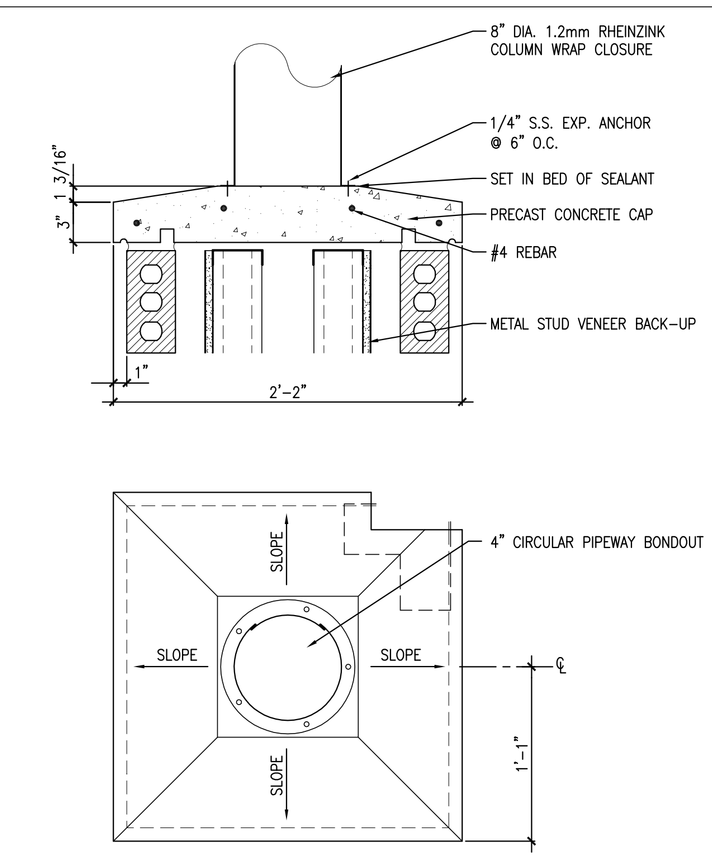

6 PRECAST CONC. CAP DETAIL @ FALSE ENCLOSURE

REFERENCED FROM: SCALE: 1 1/2" = 1'-0"

7 NOT USED

REFERENCED FROM: SCALE:

8 NOT USED

REFERENCED FROM: SCALE: 1 1/2" = 1'-0"

9 NOT USED

REFERENCED FROM: SCALE: 1 1/2" = 1'-0"

CWS Architects

Architecture
Space Planning
Value Design

434 Cumberland Avenue
Portland, ME 04101
Phone: (207)774-4441
Fax: (207)774-4016
www.CWSarch.com

Owner:

GREATER PORTLAND YMCA

c/o Cumberland County YMCA
70 Forest Ave Portland, ME 04101
(207) 874-1111

Client:

YMCA HIGH STREET ENTRY

High Street - Portland, Maine

Project No: 04454.hse

Drawing Title:

MISC. PLAN DETAILS

Scale: 1 1/2" = 1'-0"

Date: Progress 03/23/05

Revisions:

Drawing Number:

A7.2

ISSUED FOR PERMITTING & PRICING 05/12/05