1 NOT USED

REFERENCED FROM: SCALE:

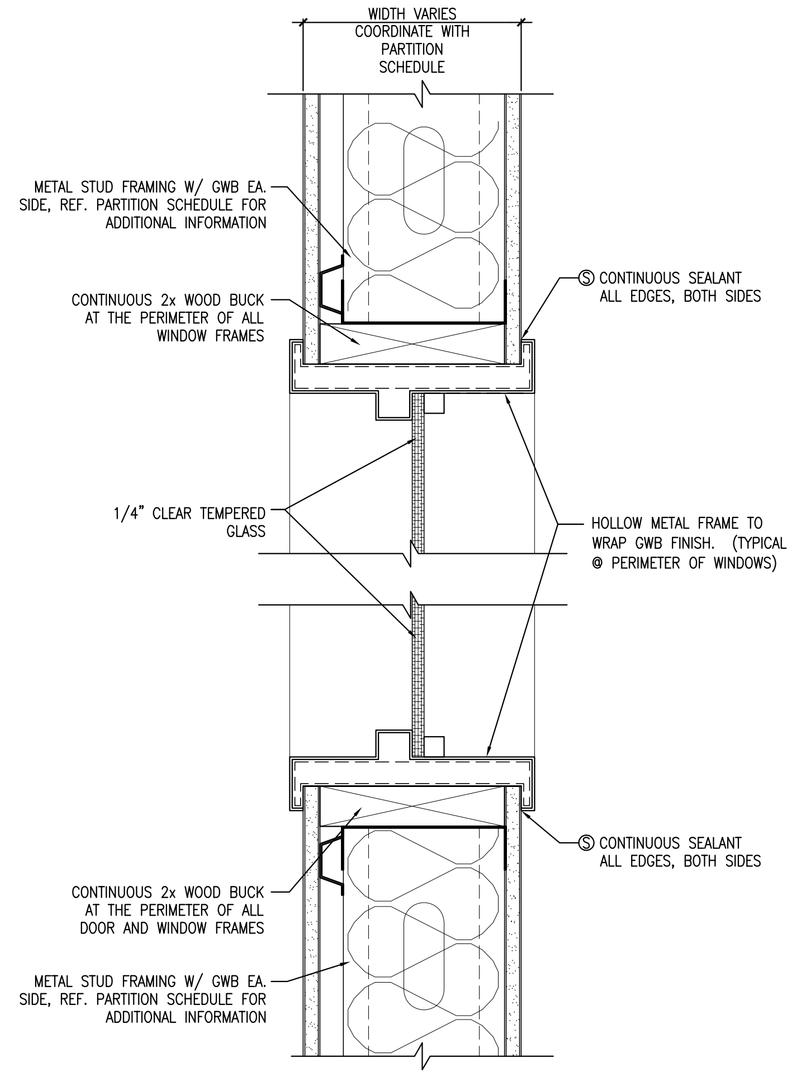

3 JAMB DETAIL @ FURRED OUT PARTITION

REFERENCED FROM: SCALE: 3" = 1'-0"

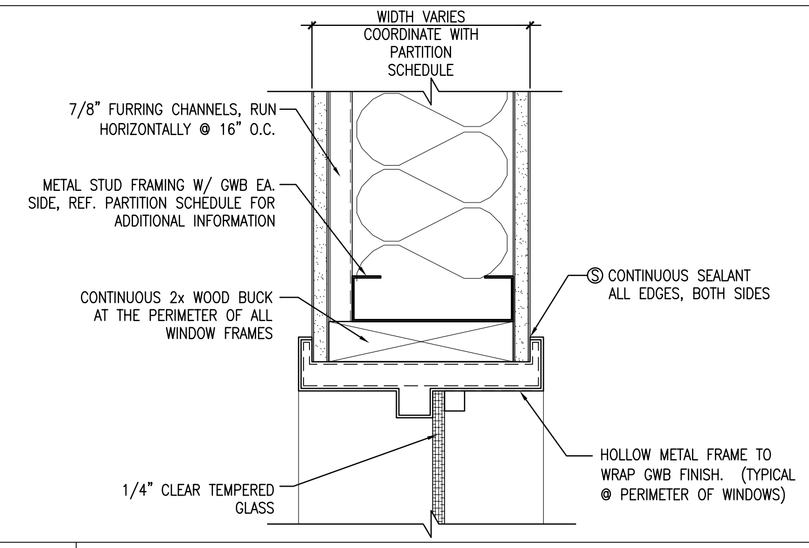

4 NOT USED

REFERENCED FROM: SCALE:

5 NOT USED

REFERENCED FROM: SCALE:

6 HEAD/SILL DETAIL @ FURRED OUT PARTITION

REFERENCED FROM: SCALE: 3" = 1'-0"

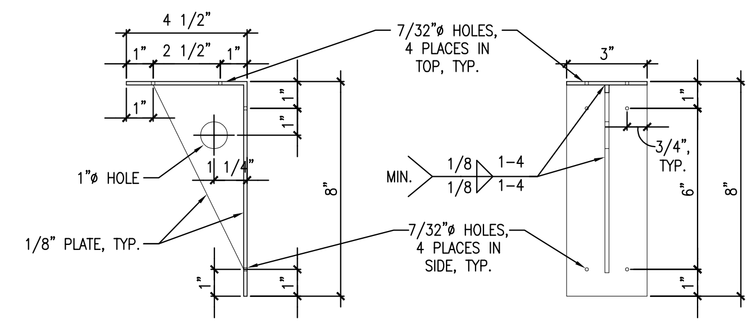

NOTES:

ALL WELDS ARE TO BE FREE OF SLAG AND SPLATTER.

MATERIAL TO BE 304L STAINLESS W/ LINEAL POWER BRUSH FINISH

ALL EDGES AND SURFACES TO BE FREE OF BURRS, SHARP EDGES, AND HEAT MARKS

7 BRACKET DETAIL @ FRONT DESK

REFERENCED FROM: SCALE: 3" = 1'-0"

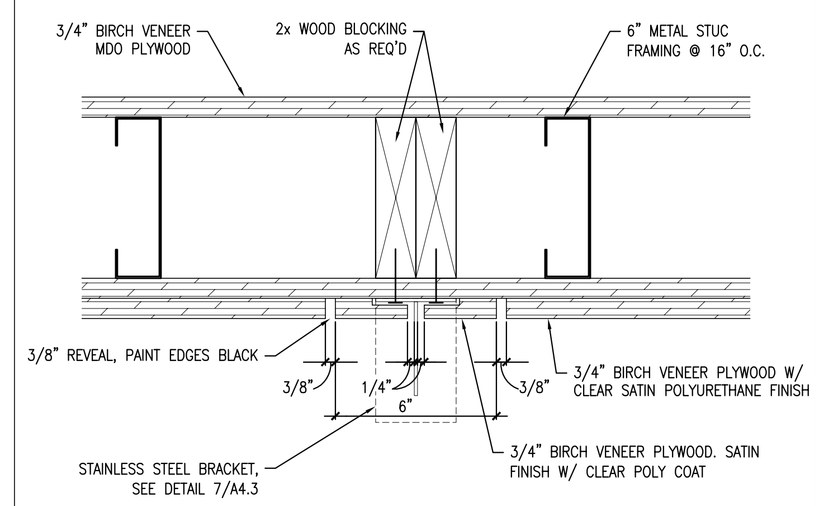

8 PLAN DETAIL @ FRONT DESK

REFERENCED FROM: SCALE: 3" = 1'-0"

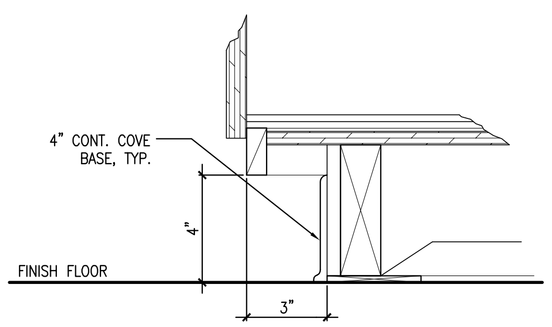

9 TOE KICK DETAIL @ CABINET BASE

REFERENCED FROM: SCALE: 3" = 1'-0"

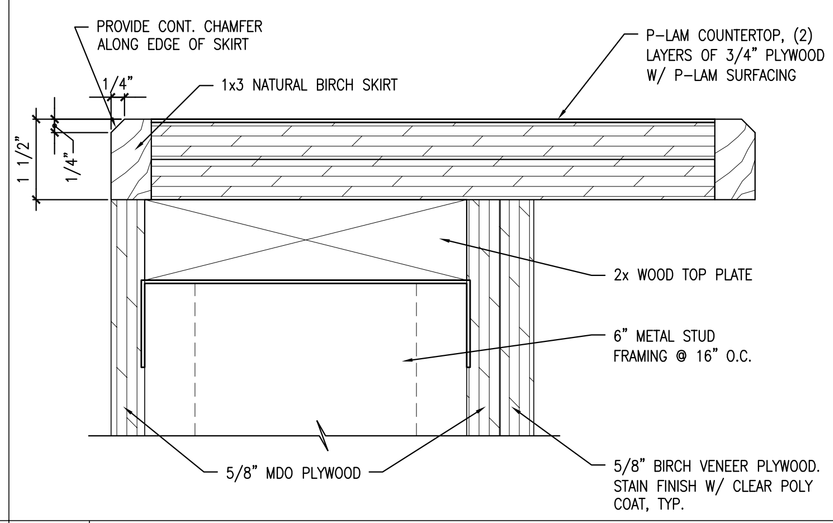

10 DETAIL @ RAISED COUNTERTOP

REFERENCED FROM: SCALE: 6" = 1'-0"

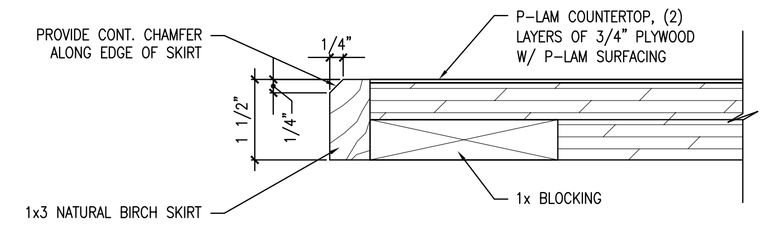

11 DETAIL @ EDGE OF COUNTERTOP

REFERENCED FROM: SCALE: 6" = 1'-0"

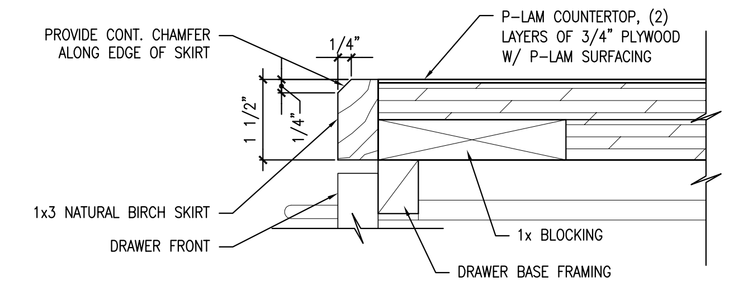

12 DETAIL @ EDGE OF COUNTERTOP

REFERENCED FROM: SCALE: 6" = 1'-0"

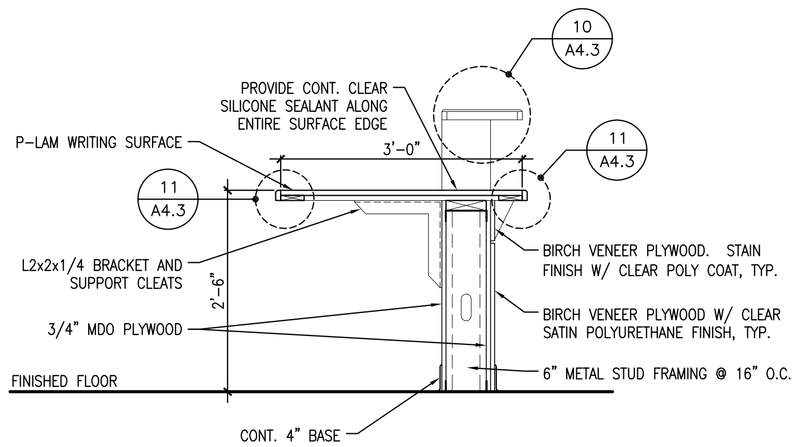

13 SECTION @ FRONT DESK

REFERENCED FROM: SCALE: 3/4" = 1'-0"

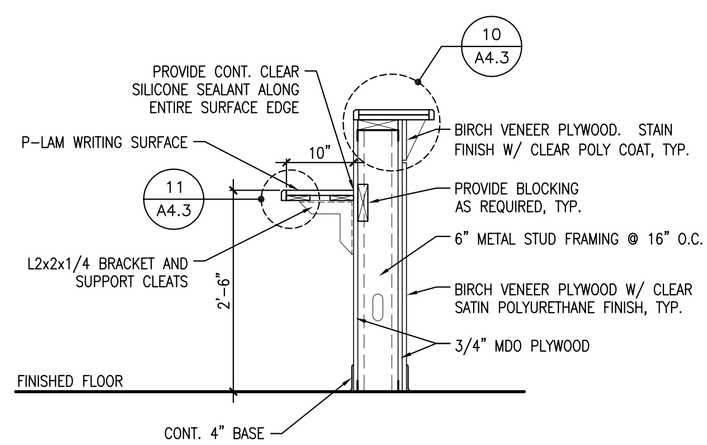

14 SECTION @ FRONT DESK

REFERENCED FROM: SCALE: 3/4" = 1'-0"

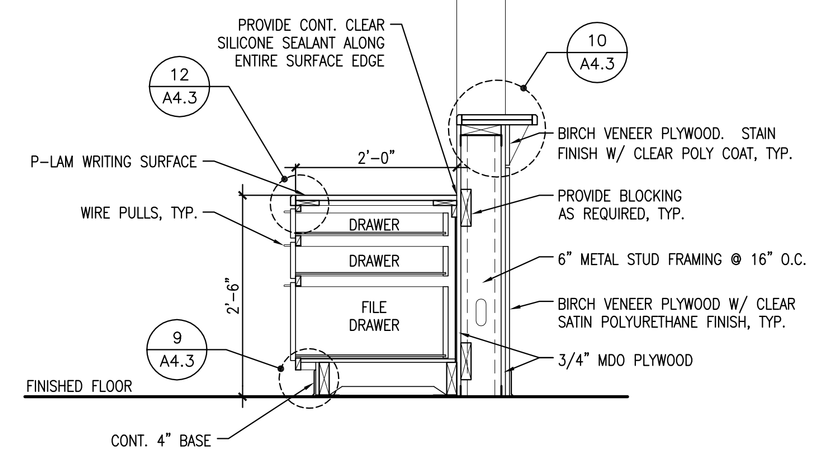

15 SECTION @ FRONT DESK

REFERENCED FROM: SCALE: 3/4" = 1'-0"

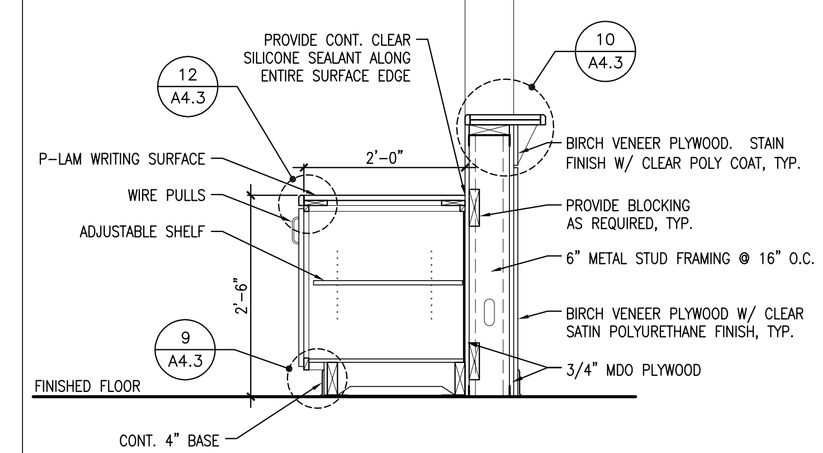

16 SECTION @ FRONT DESK

REFERENCED FROM: SCALE: 3/4" = 1'-0"

ISSUED FOR PERMITTING & PRICING 05/12/05

CWS Architects

Architecture
Space Planning
Value Design

434 Cumberland Avenue
Portland, ME 04101
Phone: (207)774-4441
Fax: (207)774-4016
www.CWSarch.com

Owner:

GREATER PORTLAND YMCA

c/o Cumberland County YMCA
70 Forest Ave Portland, ME 04101
(207) 874-1111

Client:

YMCA HIGH STREET ENTRY

High Street - Portland, Maine

Project No: 04454.hse

Drawing Title:

FRONT DESK SECTIONS AND DETAILS

Scale: AS NOTED
Date: Progress 03/23/05
Revisions:

Drawing Number:

A4.3