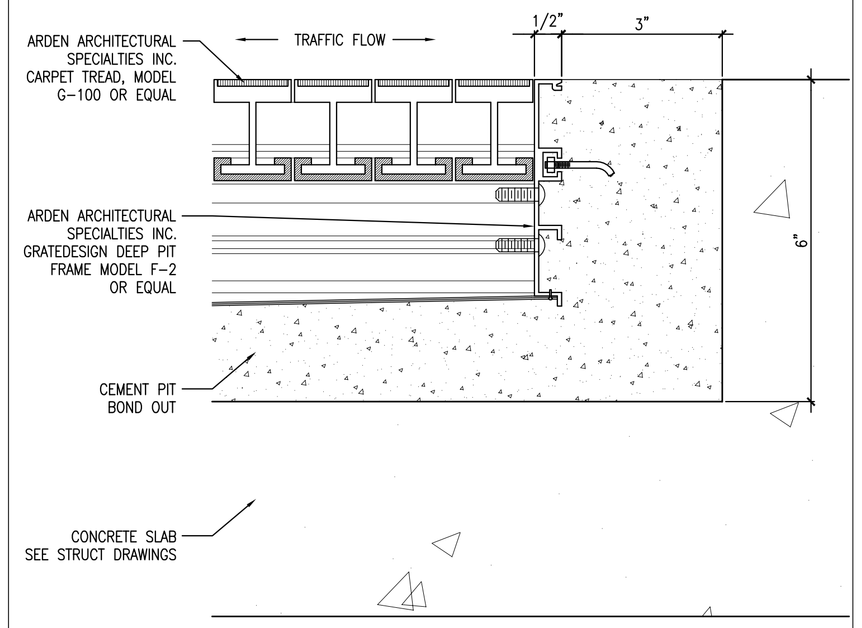

2 RECESSED FLOOR MAT DETAIL

REFERENCED FROM: SCALE: 6" = 1'-0"

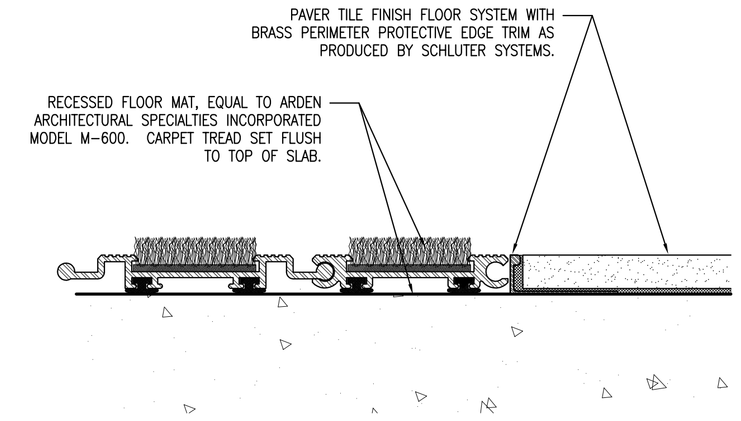

3 ENTRY LOBBY FLOOR MAT DETAIL

REFERENCED FROM: SCALE: 1" = 1"

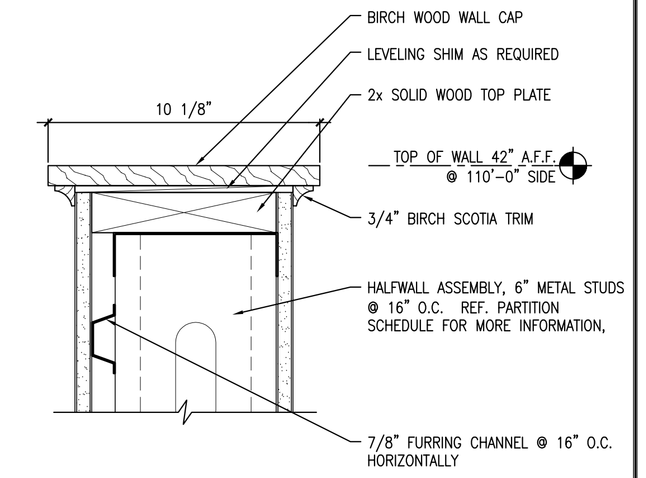

4 TYP. TOP OF HALFWALL DETAIL

REFERENCED FROM: SCALE: 3" = 1'-0"

5 NOT USED

REFERENCED FROM: SCALE:

6 NOT USED

REFERENCED FROM: SCALE:

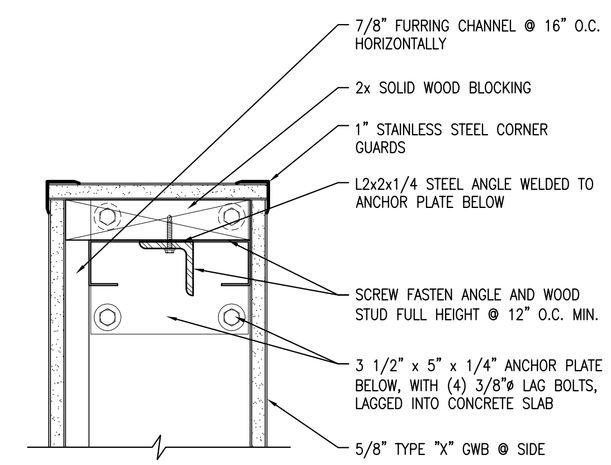

7 TYP. PLAN DETAIL @ END OF HALFWALL

REFERENCED FROM: SCALE: 3" = 1'-0"

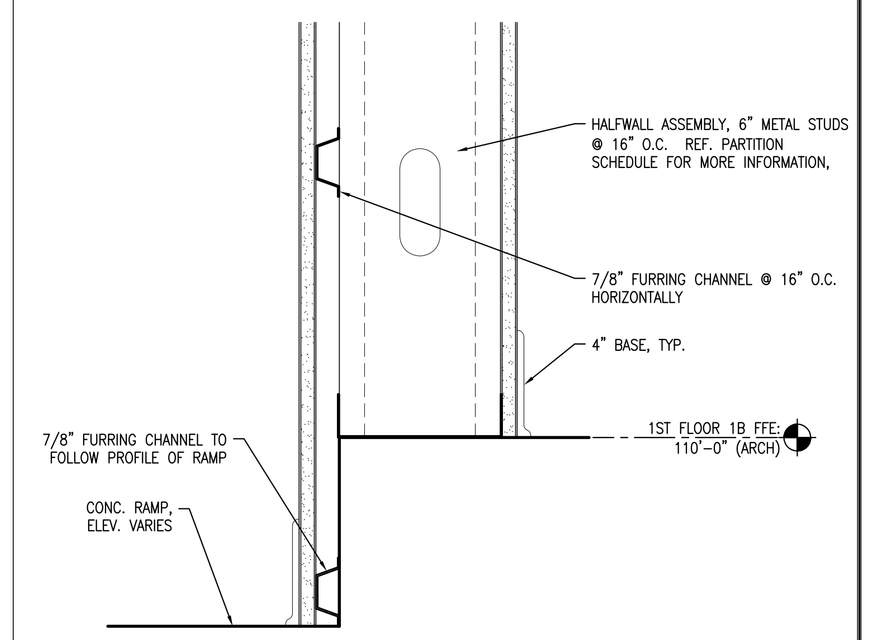

8 DETAIL @ BASE OF HALFWALL

REFERENCED FROM: SCALE: 3" = 1'-0"

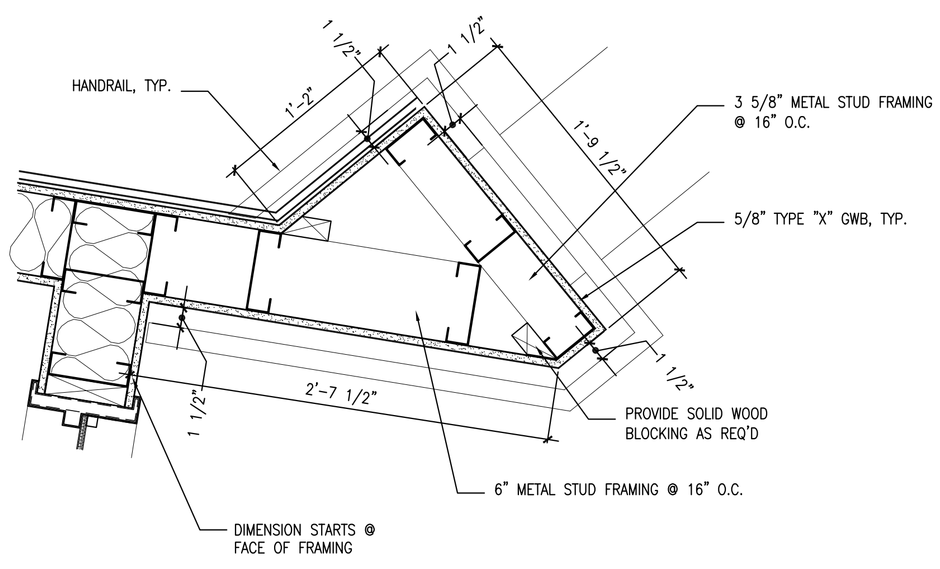

9 PLAN DETAIL @ INTERMEDIATE STAIR

REFERENCED FROM: SCALE: 1 1/2" = 1'-0"

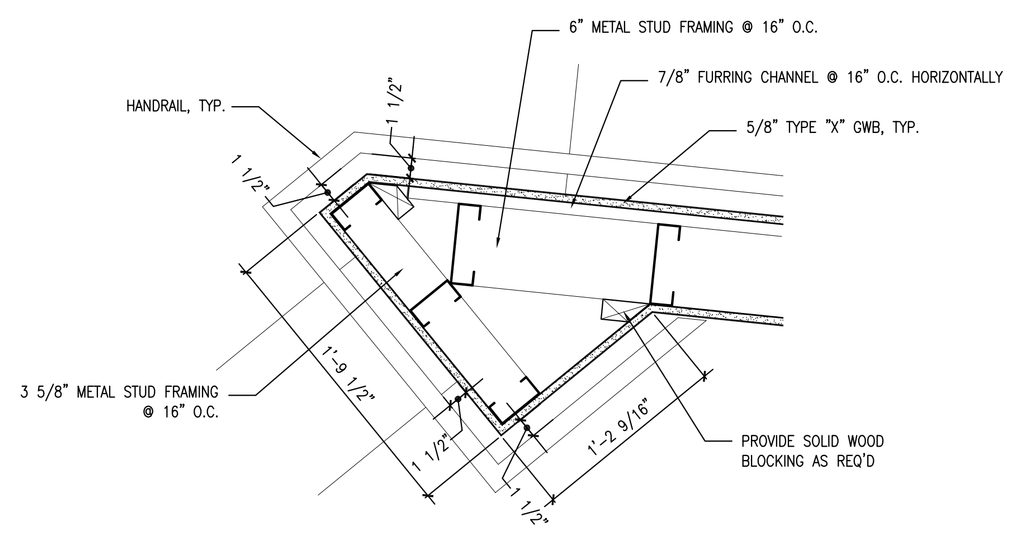

10 PLAN DETAIL @ INTERMEDIATE STAIR

REFERENCED FROM: SCALE: 1 1/2" = 1'-0"

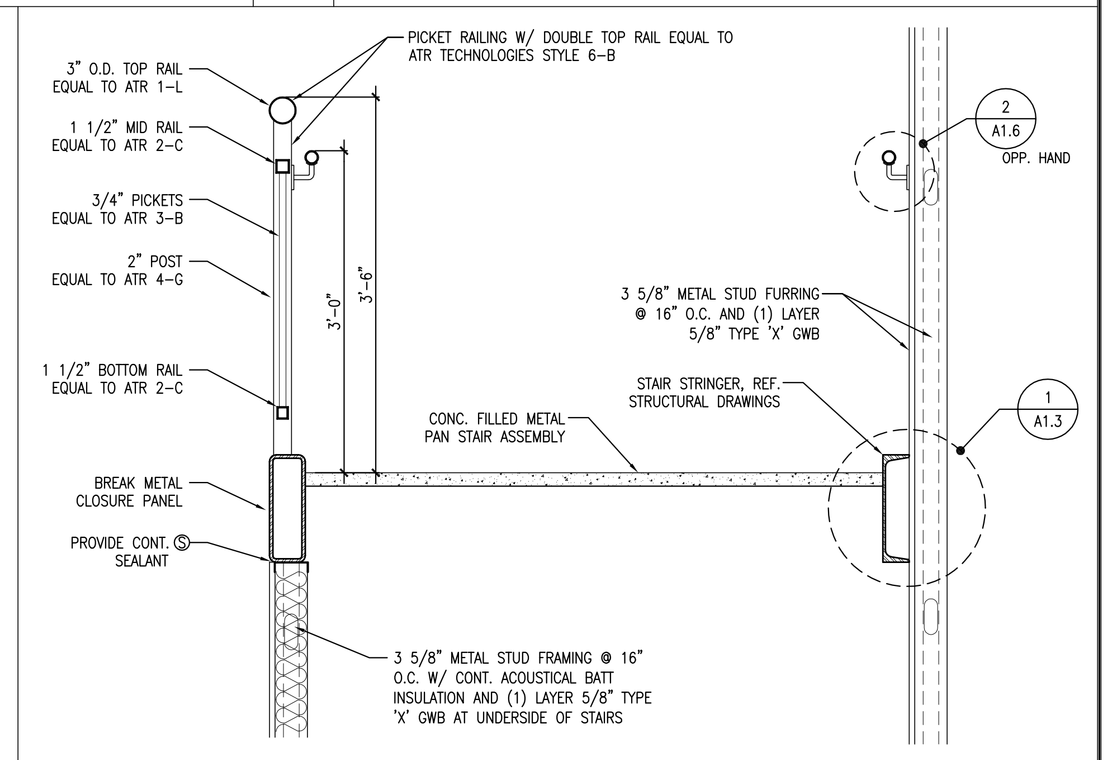

12 ENLARGED SECTION @ STAIR

REFERENCED FROM: SCALE: 1" = 1'-0"

ISSUED FOR PERMITTING & PRICING 05/12/05

CWS Architects

Architecture
Space Planning
Value Design

434 Cumberland Avenue
Portland, ME 04101
Phone: (207)774-4441
Fax: (207)774-4016
www.CWSarch.com

Owner:

GREATER PORTLAND YMCA

c/o Cumberland County YMCA
70 Forest Ave Portland, ME 04101
(207) 874-1111

Client:

YMCA HIGH STREET ENTRY

High Street - Portland, Maine

Project No: 04454.hse

Drawing Title:

STAIR, HALF WALL & ENTRY MAT DETAILS

Scale: AS NOTED

Date: Progress 03/23/05

Revisions:

Drawing Number:

A1.7