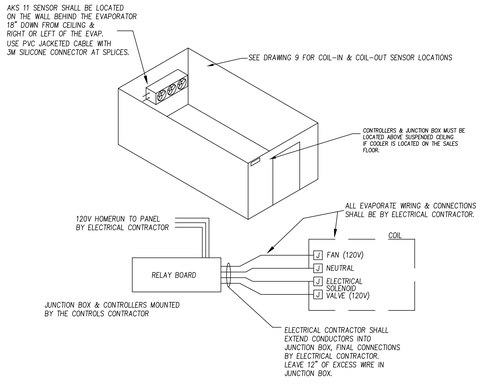

(typical of Seafood, Deli & Bakery Coolers)

CONTROL WIRING FOR COOLERS W/SINGLE COILS & AIR DEFROST

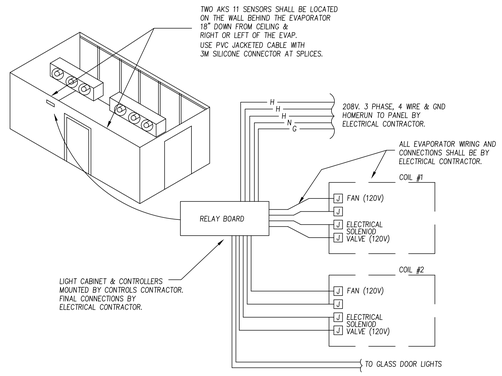

(typical of Dairy Cooler)

CONTROL WIRING FOR COOLERS W/DUAL COILS & AIR DEFROST

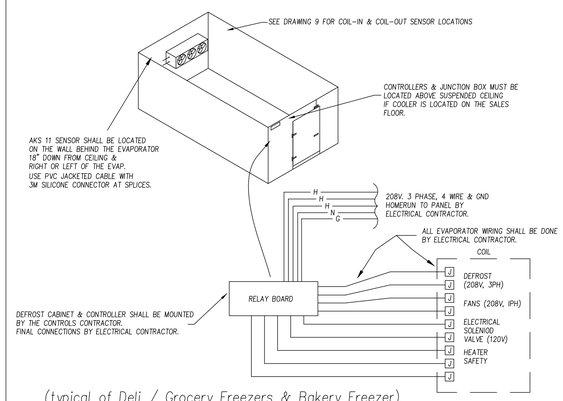

(typical of Deli / Grocery Freezers & Bakery Freezer)

CONTROL WIRING FOR FREEZERS W/SINGLE COILS

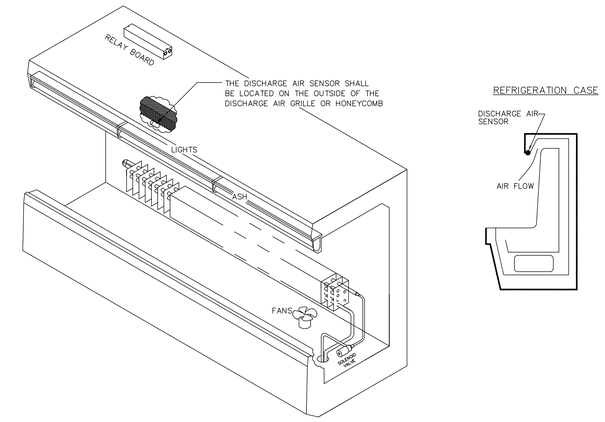

DISCHARGE AIR SENSOR LOCATION

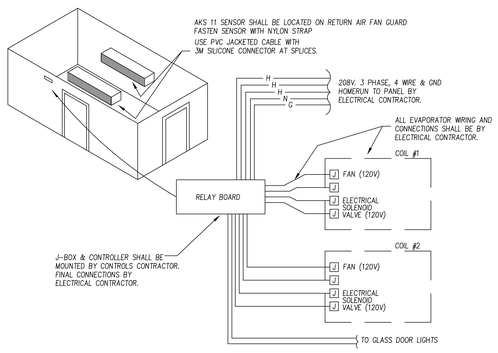

(typical of Produce Cooler and Meat Prep)

CONTROL WIRING FOR COOLERS W/LOW VELOCITY COILS & AIR DEFROST

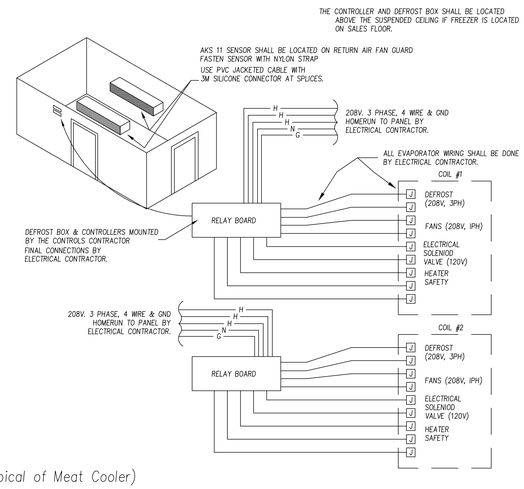

(typical of Meat Cooler)

CONTROL WIRING FOR COOLERS W/LOW VELOCITY COILS & ELECTRIC DEFROST

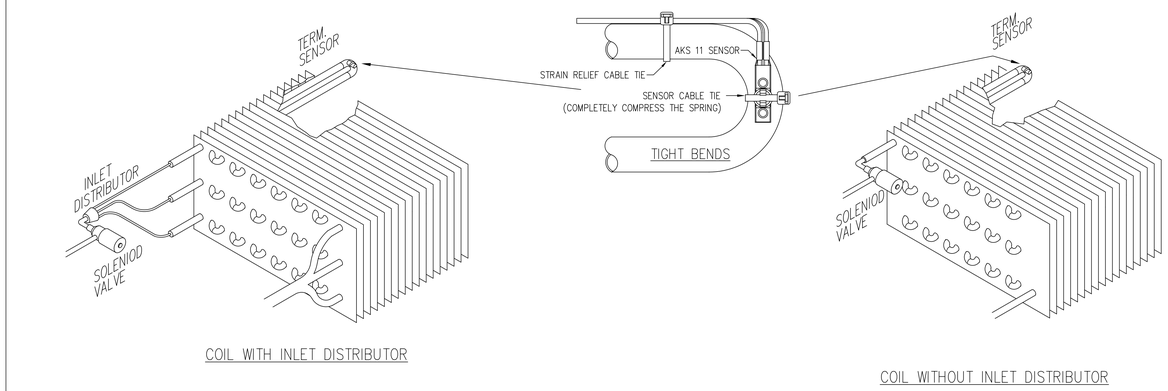

COIL WITH INLET DISTRIBUTOR

COIL WITHOUT INLET DISTRIBUTOR

Discharge air ; the discharge air sensor shall be located on outside of the discharge air grille or honeycomb. The discharge air sensor must be identified with green leads or have green labels located at the sensor and also at the lead termination point.

All sensors must be strapped with high quality wire ties specified for cold weather use. When mounting the Danfoss AKS-11 sensor the wire tie must be sized correctly to allow the sensor spring to operate correctly. Compress the spring completely upon initial install. The termination sensor shall have a wire tie securing the sensor leads within six inches of the sensor for strain relief.

Sensors shall not be wrapped with perma-seal, perma tape or any other type insulation Never run sensor leads in the same raceway as power wiring. Sensor leads must be protected from metalwork burs and sharp edges. Provide sensors with adequate lead length, there shall be no lead splicing within the case.
Sensor part numbers
084N002700 aks11 – 11.5' cable with out connector
084N002800 aks11 – 18.0' cable with out connector
084N009200 aks11 – 27.5' cable with out connector

COIL SENSOR MOUNTING DETAIL

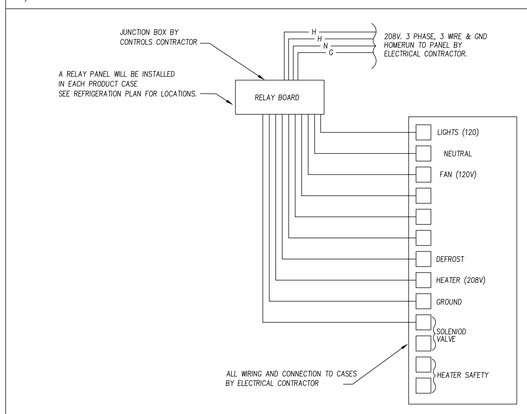

REFRIGERATION CASE WIRING LOW TEMP 208V

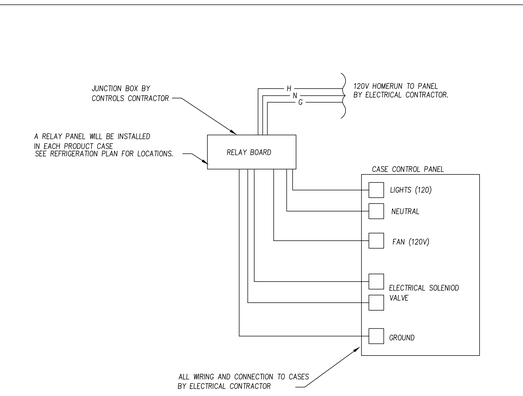

REFRIGERATION CASE WIRING MEDIUM TEMP 120V

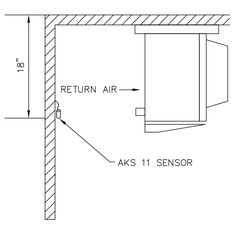

COOLER & FREEZER RETURN AIR SENSOR LOCATION (FOR SINGLE & DUAL COILS)

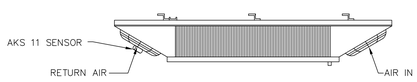

COOLER RETURN AIR SENSOR LOCATION (FOR LOW VELOCITY COILS)

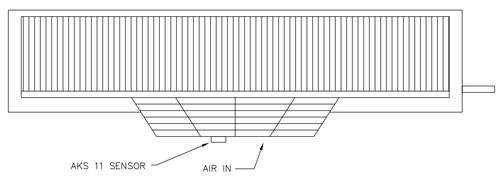

COOLER RETURN AIR SENSOR LOCATION (FOR LOW VELOCITY COILS)

No	REVISIONS	DATE	BY

No	REVISIONS	DATE	BY

PROJECT TITLE
HANNAFORD FOOD & DRUG
FOREST AVE.
PORTLAND, ME.

SHEET TITLE
EVAPORATOR DETAILS
STORE# 8351

scale	NTS
design	J. Benini
drawn	J. Benini
checked	
cad file:	BASE.DWG
date	10/24/11

SHEET
B6
proj no.