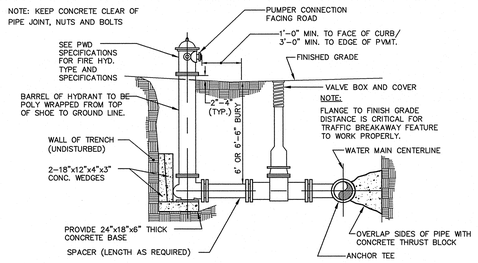

SEE NOTE 3 IN THRUST BLOCK NOTES DETAIL

FIRE HYDRANT INSTALLATION

N.T.S.

NOTE: SERVICE CONNECTIONS (DIRECT TAPS AND SERVICE CLAMPS) WILL BE INSTALLED SO THAT THE OUTLET IS AT AN ANGLE OF NOT MORE THAN 45° ABOVE THE HORIZONTAL. ALWAYS PUT A BEND OR "GOOSENECK" IN THE SERVICE LINE PRIOR TO CONNECTING TO PROVIDE FLEXIBILITY AND "GIVE" TO COUNTERACT THE EFFECTS OF A LOAD DUE TO SETTLEMENT OR EXPANSION AND/OR CONTRACTION.

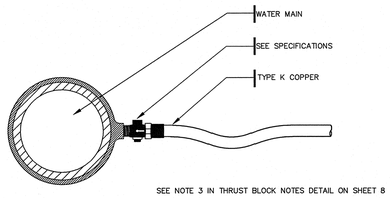

SEE NOTE 3 IN THRUST BLOCK NOTES DETAIL ON SHEET 8

WATER SERVICE

(1 1/2" AND 2 1/2" C.C. OR IRON PIPE THREAD)
N.T.S.

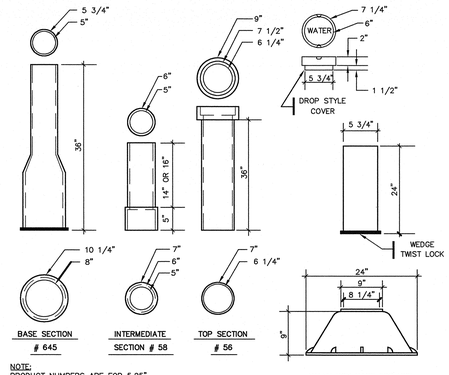

NOTE:
PRODUCT NUMBERS ARE FOR 5.25" BUFFALO VALVE BOXES

SEE NOTE 3 IN THRUST BLOCK NOTES DETAIL

TYPICAL VALVE BOXES

N.T.S.

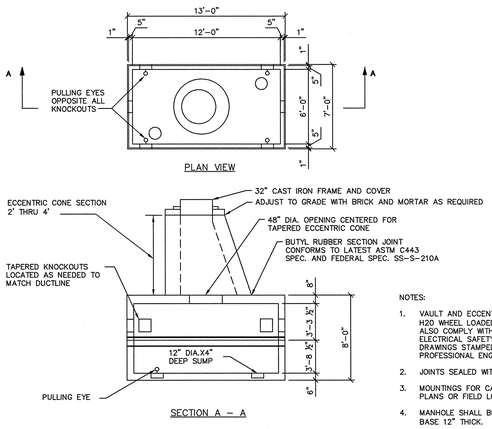

NOTES:

1. VAULT AND ECCENTRIC CONE SHALL BE DESIGNED TO WITHSTAND H20 WHEEL LOADED WITH 6" OF OVERBURDEN. THE DESIGN SHALL ALSO COMPLY WITH THE STRENGTH REQUIREMENTS OF NATIONAL ELECTRICAL SAFETY CODE SECTION 323A. PROVIDE SHOP DRAWINGS STAMPED BY A STATE OF MAINE REGISTERED PROFESSIONAL ENGINEER UPON REQUEST.
2. JOINTS SEALED WITH BUTYL RUBBER.
3. MOUNTINGS FOR CABLE RACKS ETC. CAST IN WALL BY FURTHER PLANS OR FIELD LOCATED.
4. MANHOLE SHALL BE SET ON A SUITABLE COMPACTED GRAVEL BASE 12" THICK.
5. CABLES AND CONDUITS ARE TO BE RACKED ALONG ONE WALL ONLY.
6. VAULT, MANHOLE RISERS, AND ASSOCIATED COMPONENTS SHALL CONFORM TO CENTRAL MAINE POWER COMPANY'S (CMP) CONSTRUCTION STANDARDS.

HEAVY DUTY UTILITY VAULT

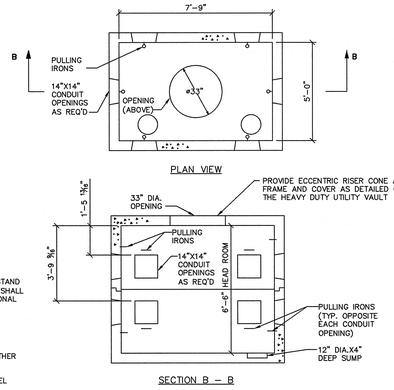

LIGHT DUTY UTILITY VAULT

PRECAST CONCRETE VAULT (FOR CMP)

N.T.S.

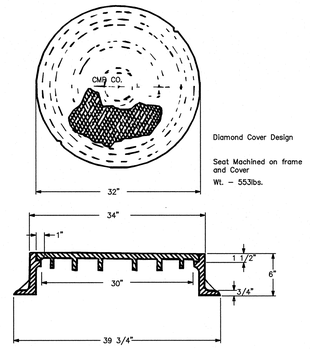

32" MANHOLE COVER & FRAME

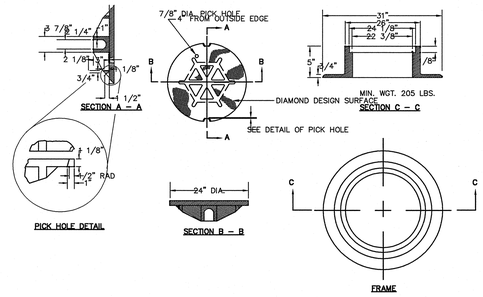

TYPE "A" MANHOLE COVER AND FRAME

N.T.S.

GENERAL NOTES

1. ALL CONCRETE SHALL BE A CLASS "A" AND HAVE A MINIMUM ULTIMATE STRENGTH OF 4000 lbs. PER SQ. INCH AT THE END OF 28 DAYS, UNLESS OTHERWISE NOTED.
2. PRECAST REINFORCED CONE BARREL MANUFACTURE PER ASTM SPEC. C-478-67
3. SEWER BRICK TO CONFORM TO ASTM SPEC. DESIGNATE ON C-32-63, GRADE MA AND SA.
4. ALL MANHOLES SHALL HAVE A BITUMINOUS WATERPROOFING APPLIED TO THE EXTERIOR SURFACE. IF CONSTRUCTION OF BRICK MASONRY, THE SMOOTH MORTAR SURFACE SHALL BE PLASTERED WITH A SMOOTH MORTAR FINISH 3/8" THICK. AFTER THE MORTAR HAS SET, THE SURFACE SHALL BE WATERPROOFED AS REQUIRED BY SUPPLEMENTAL SPEC-IFCATIONS SECTION 604.
5. CASTINGS SHALL CONFORM TO ASTM DESIGNATION A48-CLASS 35. ALL PARTS OF CASTINGS, EXCEPT FINISHED SURFACE, SHALL RECEIVE A COAT OF COAL TAR PITCH VARNISH OR ASPHALTUM PAINT WHICH SHALL BE SMOOTH AND TOUGH BUT NOT BRITTLE.
6. MANHOLES MAY BE CONSTRUCTED OF MASONRY, PRECAST REINFORCED CONCRETE, OR CAST IN PLACE.
7. ALL PRECAST MANHOLES AND CATCH BASINS SHALL BE IDENTIFIED BY STATION AND OFFSET, PAINTED ON THE SIDE OF THE STRUCTURE BY THE MANUFACTURER.
8. STORM AND SEWER MANHOLES SHALL HAVE SOLID COVERS WITH ONE DRILLED HOLE.
9. EXISTING MANHOLE AND CATCH BASIN FRAMES AND COVERS SHALL BE SALVAGED BY THE CONTRACTOR, AND REMAIN THE PROPERTY OF THE CITY OF PORTLAND.
10. CASCO TRAPS SHALL BE PROVIDED WITHIN ALL CATCH BASINS WITH 12" OUTLETS.

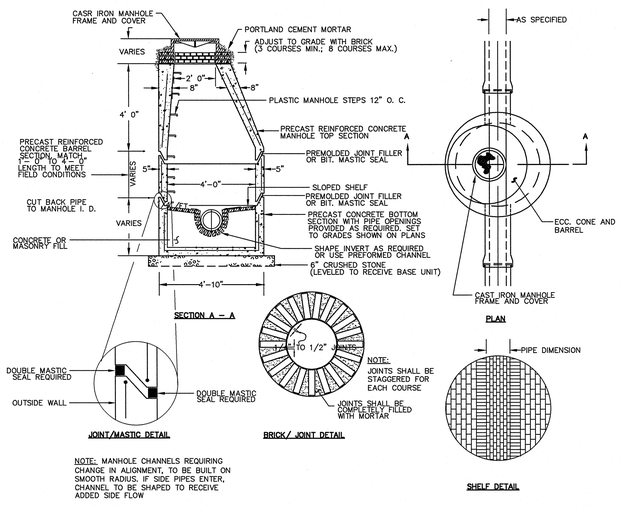

NOTE: MANHOLE CHANNELS REQUIRING CHANGE IN ALIGNMENT, TO BE BUILT ON SMOOTH RADIUS. IF SIDE PIPES ENTER, CHANNEL TO BE SHAPED TO RECEIVE ADDED SIDE FLOW

PRECAST CONCRETE MANHOLE TYPE "A"

N.T.S.

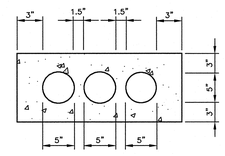

3 CONDUIT LAYOUT

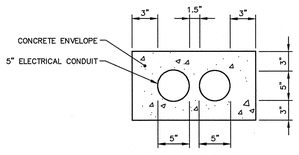

2 CONDUIT LAYOUT

ELECTRICAL CONDUIT PROFILES

N.T.S.

SEAL
STATE OF MAINE
WILLIAM C. HASKELL
No. 6018
LICENSED
PROFESSIONAL ENGINEER

pizzagalli construction company

MITCHELL & ASSOCIATES
Landscape Architects
The Staples School
70 Center Street
Portland, Maine 04101
Tel. (207) 774-4427
Fax (207) 874-2460

Gorrill-Palmer Consulting Engineers, Inc.
Traffic and Civil Engineering Services
15 Shaker Road 207-657-6910
Gray, ME 04039 FAX: 207-657-6912

Project Title

84 MARGINAL WAY
Portland, Maine

HA Project No. 06196

Key Plan

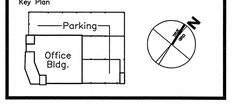

Mark	Date	Description
–	05.08.07	ISSUED FOR CONSTRUCTION
–	03.26.07	100% DESIGN DEVELOPMENT

Issue Dates

Drawing Status

ISSUED FOR CONSTRUCTION

Drawing Title

UTILITY AND DRAINAGE DETAILS

PA / PE: WCH | Drawn By: BVD

Drawing Number

9

S:\Land Projects\14100.01\dwg\14100.01_DET.dwg, Utility and Drainage (9), 5/8/2007 1:48:45 PM, bvandamme, 1:1