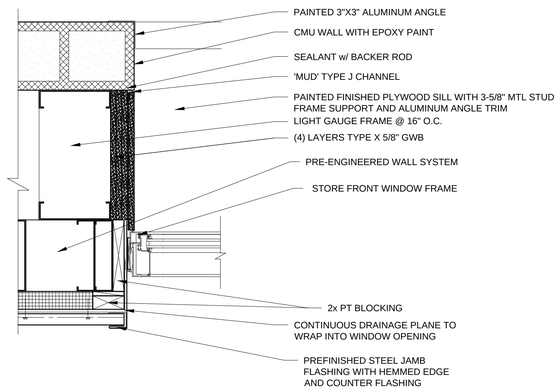

9 STAIR WELL WINDOW JAMB PLAN DETAIL
1-1/2" = 1'-0"

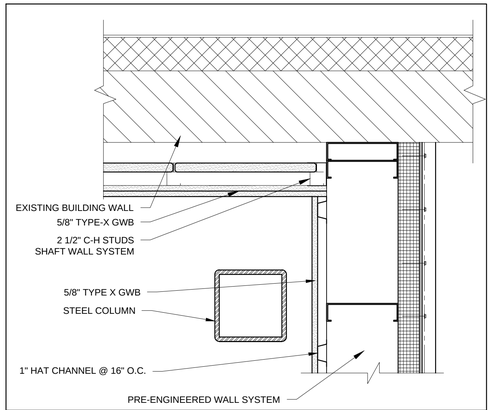

6 EXTERIOR WALL MEETS EXISTING BUILDING EAST LOCATION
1-1/2" = 1'-0"

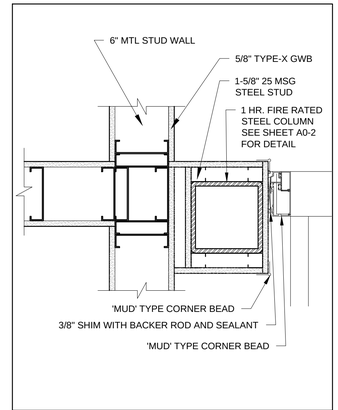

5 DOOR JAMB MEETS STRUCTURAL COLUMN PLAN DETAIL
1-1/2" = 1'-0"

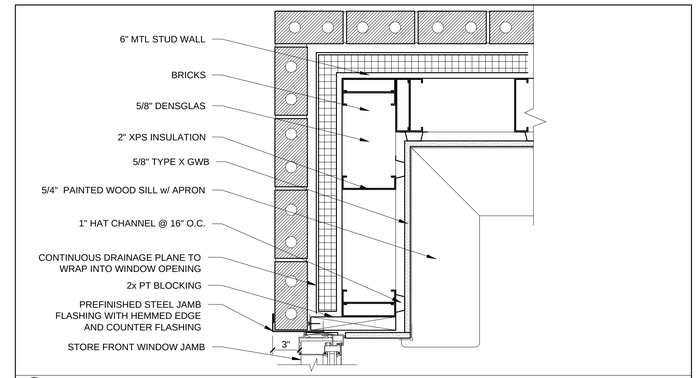

2 ENTRY SIDE LIGHT WINDOW PLAN DETAIL
1-1/2" = 1'-0"

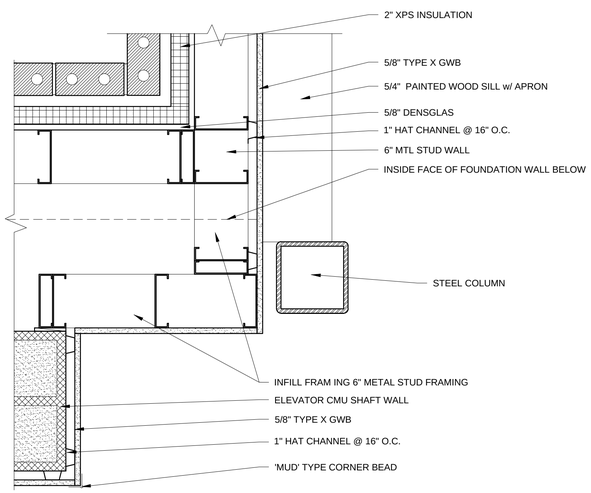

8 STRUCTURAL COLUMN PLAN DETAIL NEAR WEST STAIR ELEVATOR LOCATION

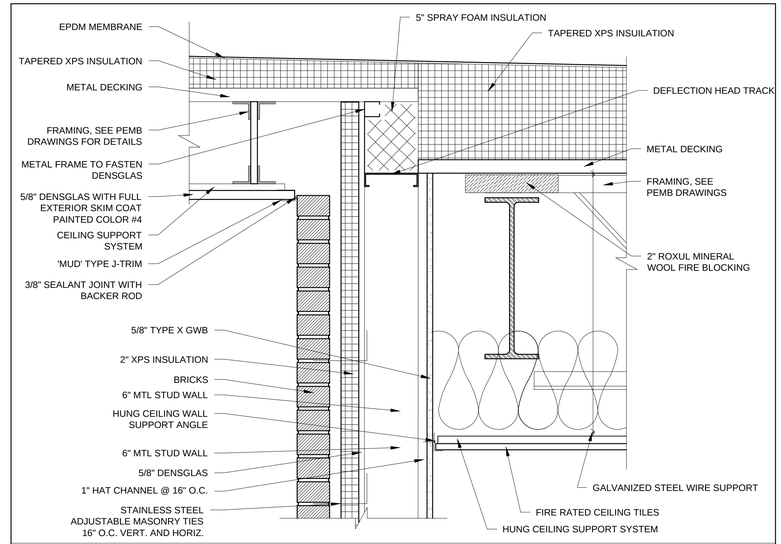

4 ENTRY CANOPY MEETS WALL SECTION DETAIL
1-1/2" = 1'-0"

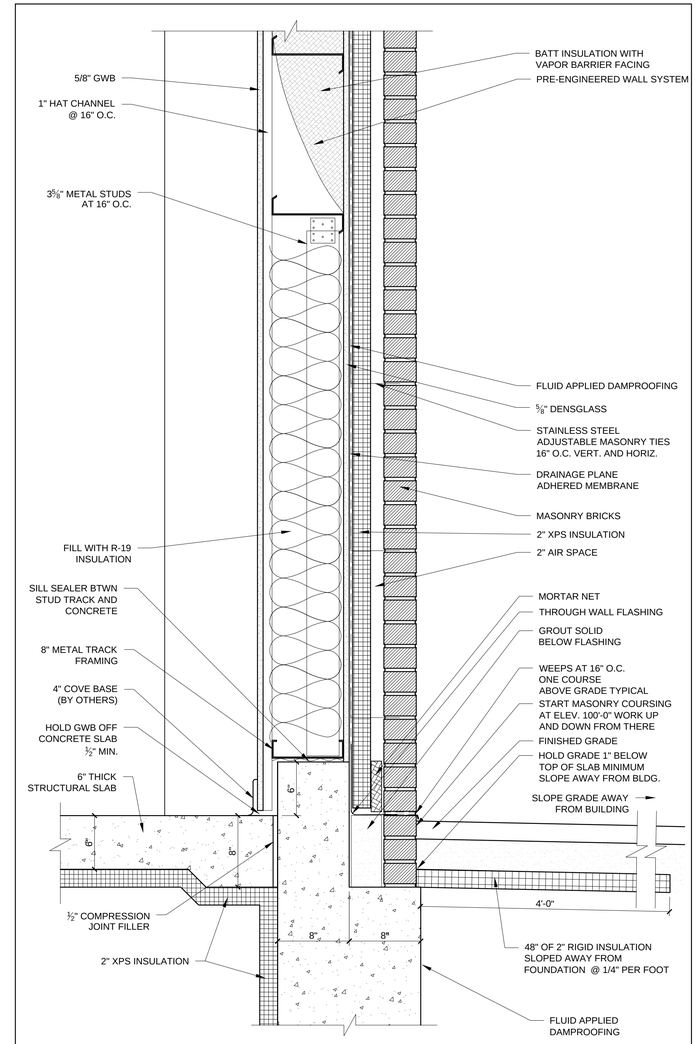

1 FOUNDATION SECTION DETAIL @ ENTRY LOCATION
1-1/2" = 1'-0"

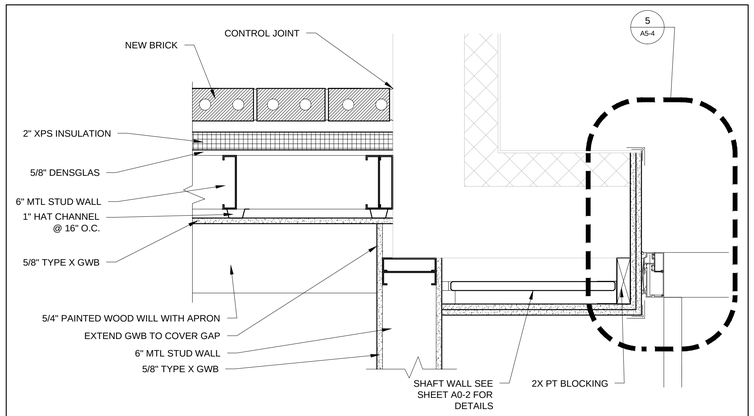

7 EXTERIOR WALL MEETS WEST END OF EXISTING BUIULDING
1-1/2" = 1'-0"

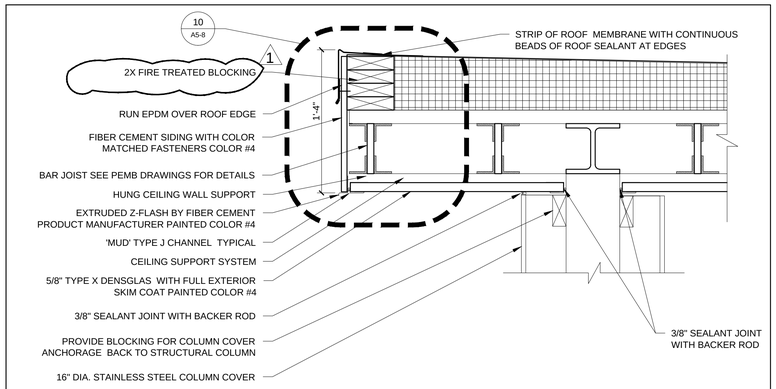

3 ENTRY CANOPY SECTION DETAIL @ SUPPORT COLUMN
1-1/2" = 1'-0"

REGISTERED ARCHITECT
RYAN J. SENATORE
No. 3322
STATE OF MAINE

© 2016 RYAN SENATORE ARCHITECTURE

ADDITION TO BAYSIDE BOWL

ALDER STREET
PORTLAND, MAINE

RSA
RYAN SENATORE ARCHITECTURE
565 CONGRESS STREET
PORTLAND, MAINE 04101
207-650-6414
senatorearchitecture.com

CONSULTANTS:

STRUCTURAL:
Structural Integrity
77 Oak Street
Portland, ME 04101
207-774-4614

REVISIONS:
1 REVISION #1 06/03/16

DATE:	MAY 4, 2016
PROJECT No.	1452
DRAWN BY:	JPF / RRT / RJS
CHECKED BY:	RJS
SCALE:	AS NOTED

SHEET TITLE:
DETAILS

A5-7