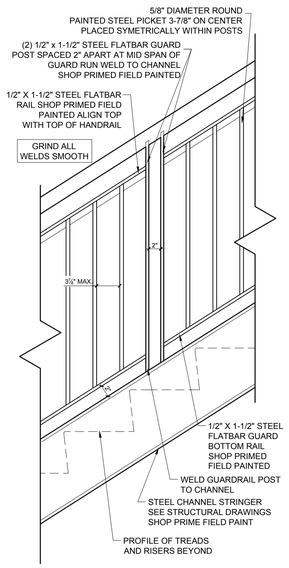

9 MEZZANINE STAIR GAURDRAIL DETAIL
1"=1'-0"

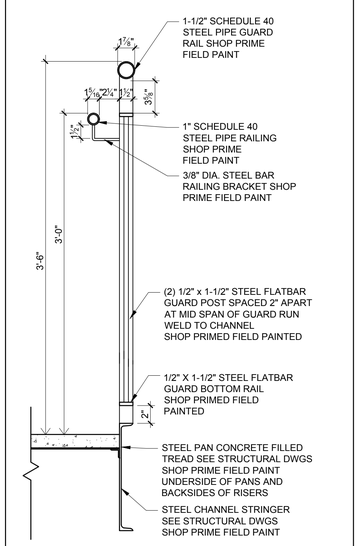

8 MEZZANINE STAIR GAURDRAIL DETAIL
1"=1'-0"

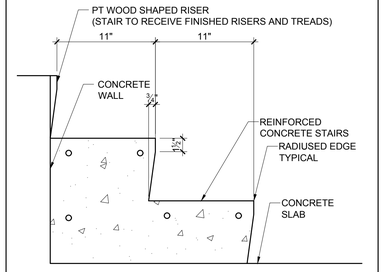

7 TYPICAL INTERIOR CONCRETE STAIR SECTION
1-1/2"=1'-0"

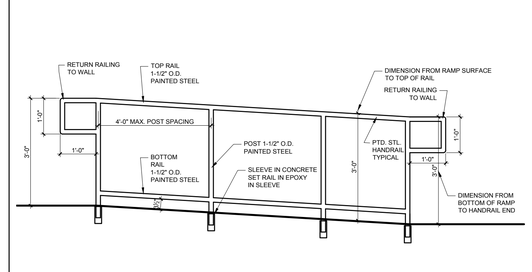

6 TYPICAL GUARD RAIL DETAIL AT RAMP
1/2"=1'-0"

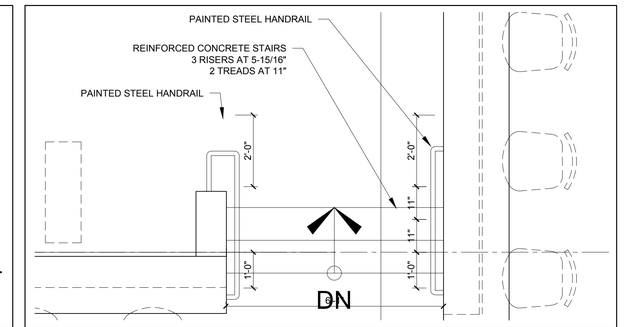

2 STAIR AT LOUNGE AREA
1/2" = 1'-0"

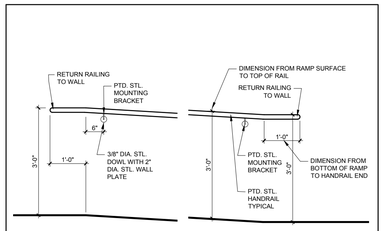

RAILING AT TOP OF RAMP RAILING AT BOTTOM OF RAMP

5 TYPICAL HAND RAILING DETAILS AT RAMP
1/2"=1'-0"

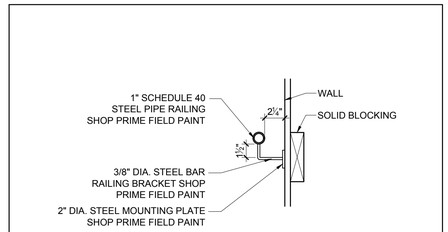

4 TYPICAL SECTION DETAIL OF HANDRAIL AT WALL
1-1/2"=1'-0"

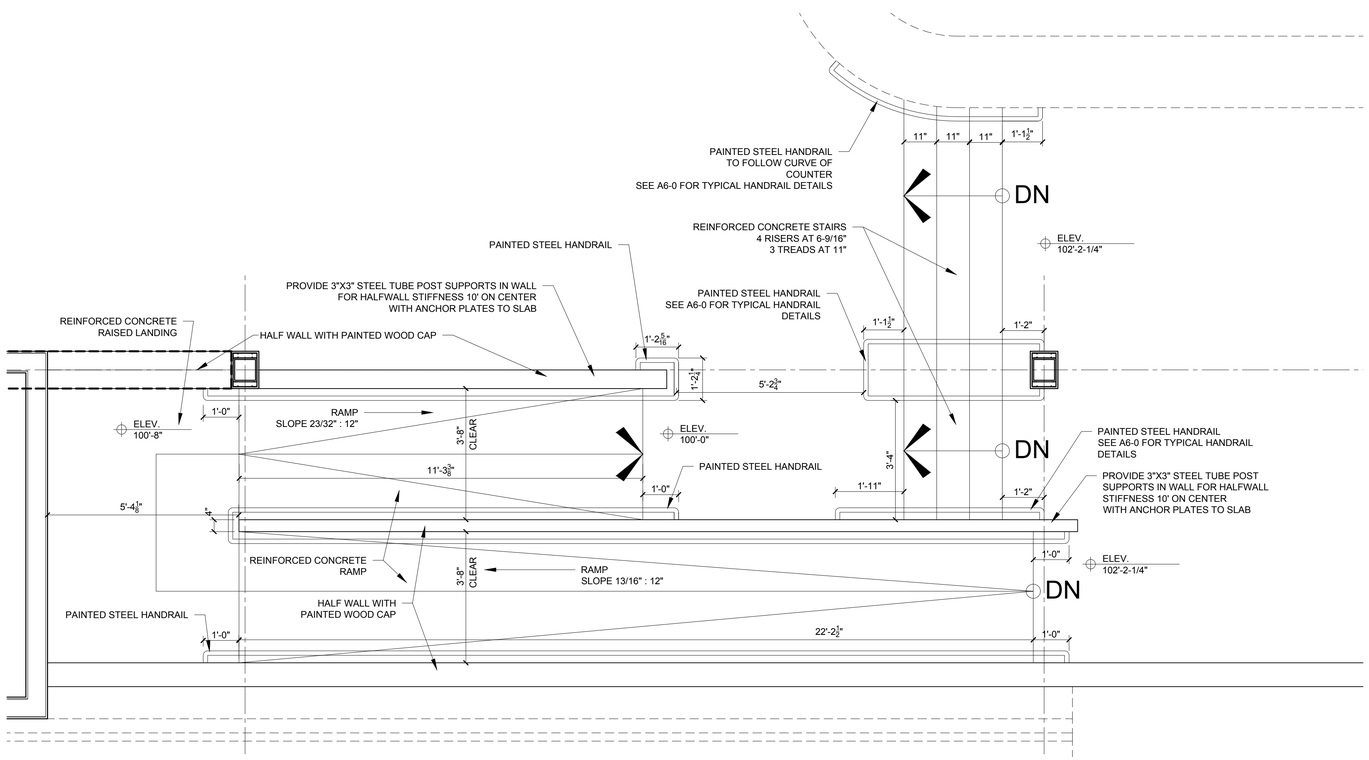

3 STAIR AND RAMP AT LOBBY AREA
1/2" = 1'-0"

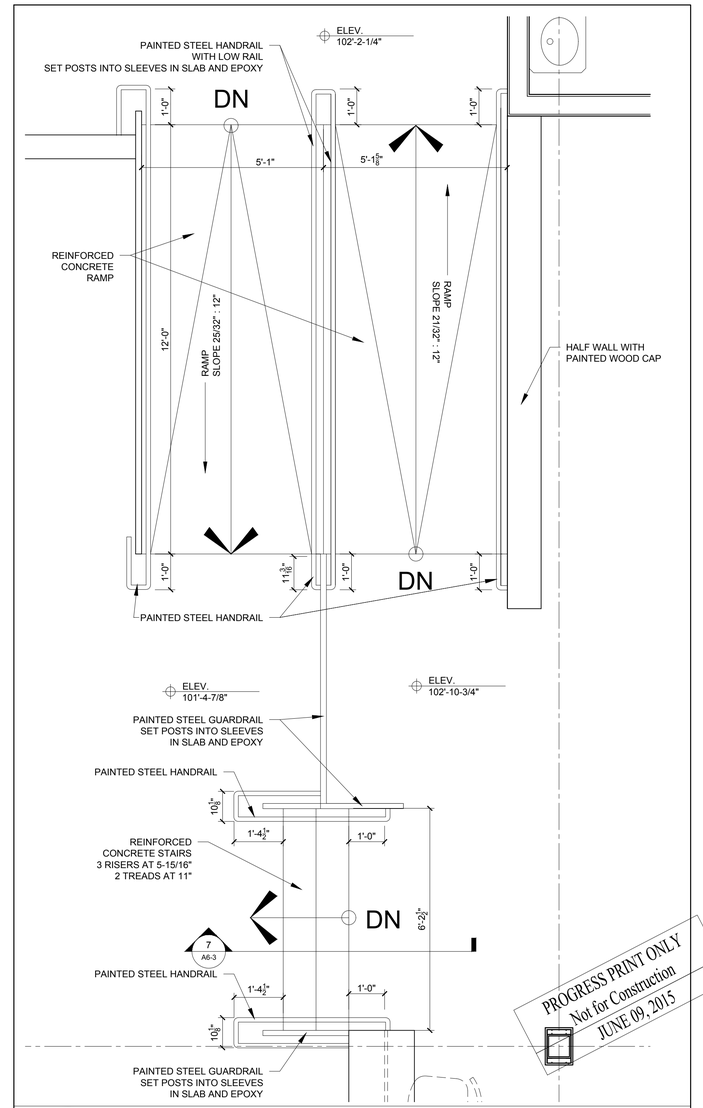

1 STAIR AND RAMP AT BOWLING LANE AREA
1/2" = 1'-0"

PROGRESS PRINT ONLY
Not for Construction
JUNE 09, 2015

© 2015 RYAN SENATORE
ARCHITECTURE

ADDITION TO BAYSIDE BOWL

ALDER STREET
PORTLAND, MAINE

RSA
RYAN SENATORE
ARCHITECTURE
565 CONGRESS STREET
PORTLAND, MAINE 04101
207-650-6414
senatorearchitecture.com

CONSULTANTS:

STRUCTURAL:
Structural Integrity
77 Oak Street
Portland, ME 04101
207-774-4614

REVISIONS:

DATE:	JUNE 09, 2015
PROJECT No.	1452
DRAWN BY:	JPF / RRT / RJS
CHECKED BY:	RJS
SCALE:	AS NOTED

SHEET TITLE:
INTERIOR RAMP AND STAIR DETAILS

A6-3