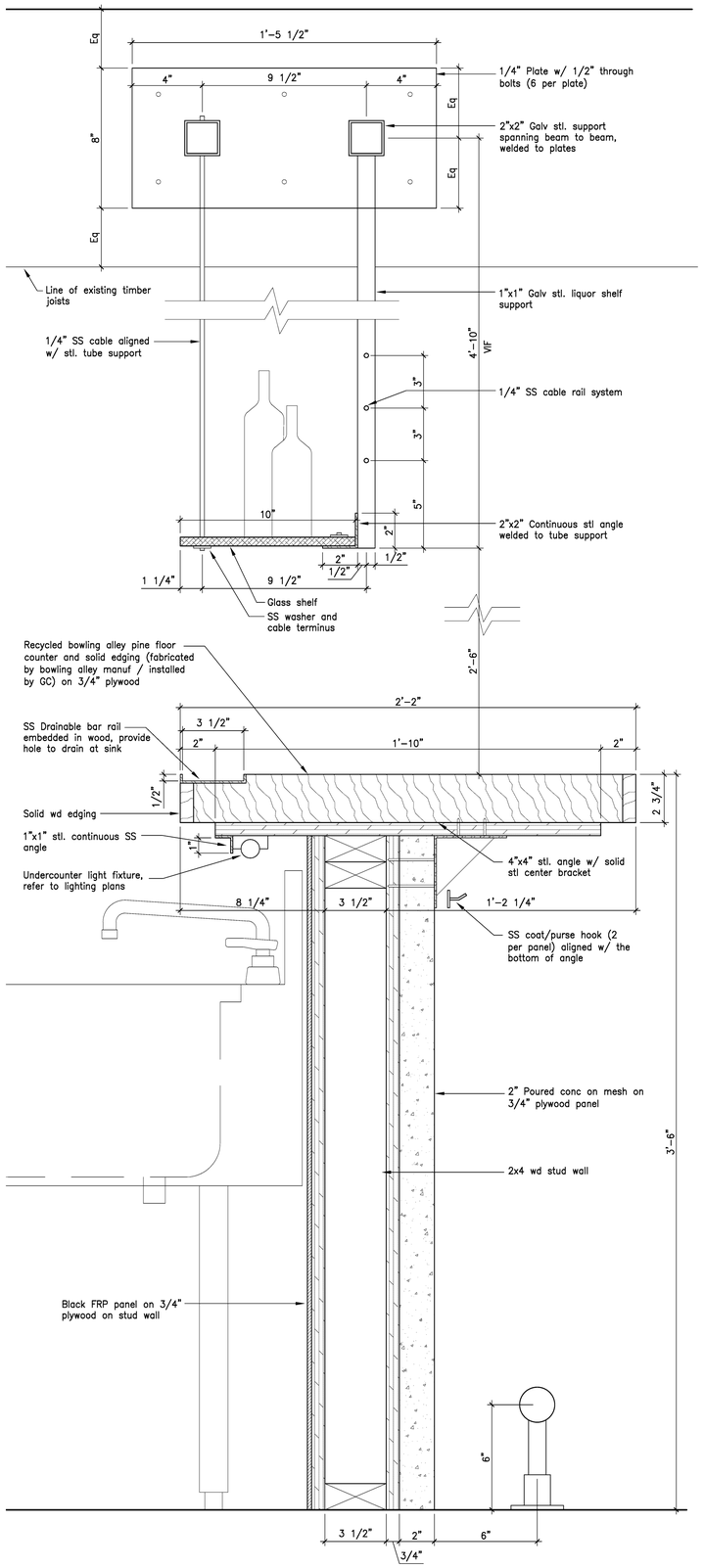

5 Bar and Liquor Shelf Detail

Scale: 3" = 1'-0"

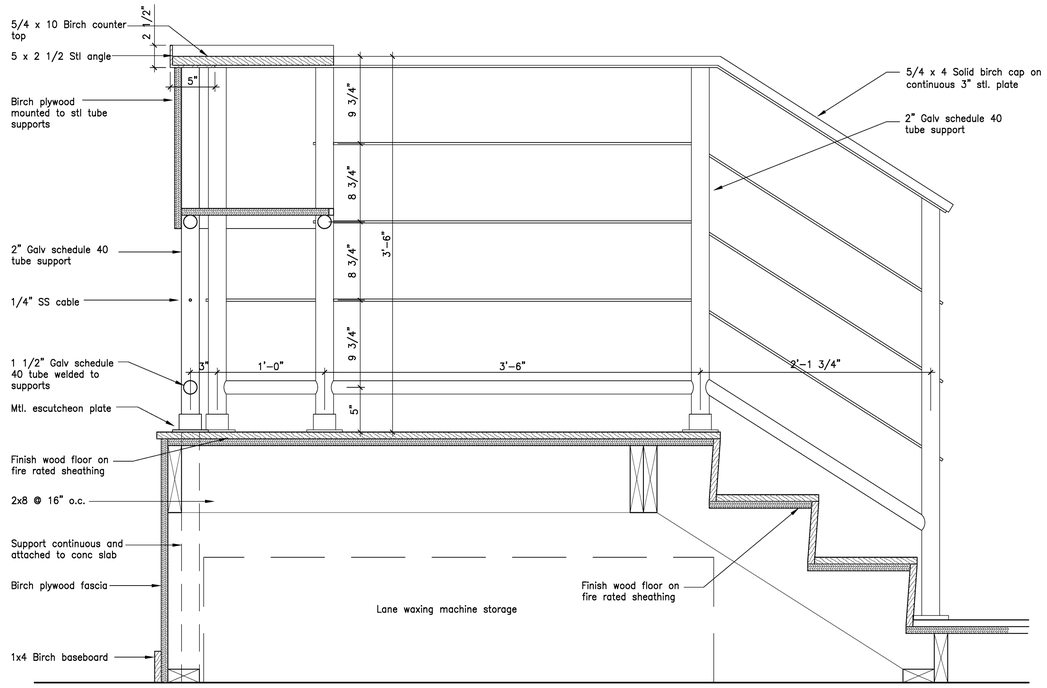

3 DJ Booth Platform Detail

Scale: 1 1/2" = 1'-0"

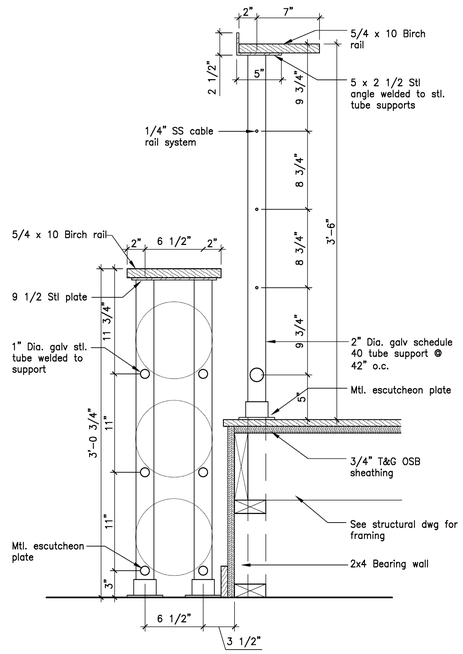

1 Drink / Guard Rail / Bowling Ball Rack

Scale: 1 1/2" = 1'-0"

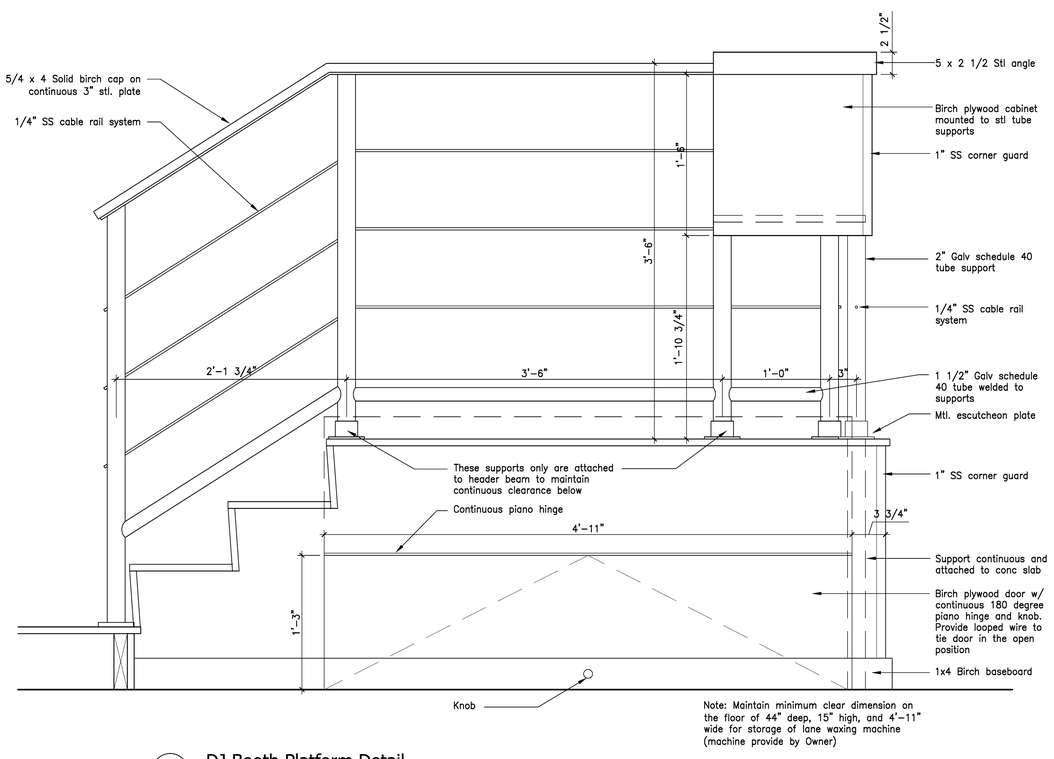

4 DJ Booth Platform Detail

Scale: 1 1/2" = 1'-0"

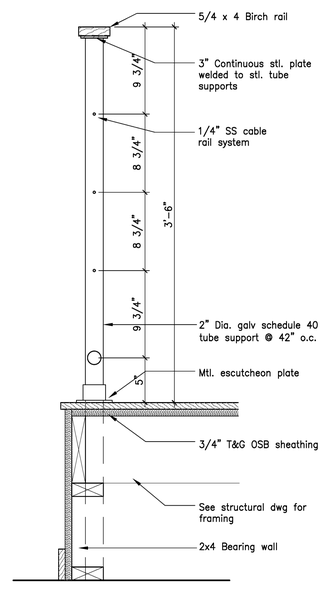

2 Guard Rail Detail

Scale: 1 1/2" = 1'-0"

DayMatero studio

Architecture • Lighting Design

100 Front Street
Top Floor
Bath Maine US 04530
207.671.6819
info@daymatero.com

Consultants

Casco Bay Engineering
Structural Engineer

Casco Bay Engineering
Civil Engineer

TJM Consulting
Food Service

Urban Dwellings
Interior Design

Revisions

.

Bowl Portland

58 Alder Street Portland, Maine

LICENSED ARCHITECT
DAVID S. MATERO
No. 2705
STATE OF MAINE

Job Number: 09.017

Date: 07.Dec.09

Scale: As Noted

Drawing Title:

Interior Details

A9.6

Issue for Bid

Copyright 2009, DayMatero studio LLC