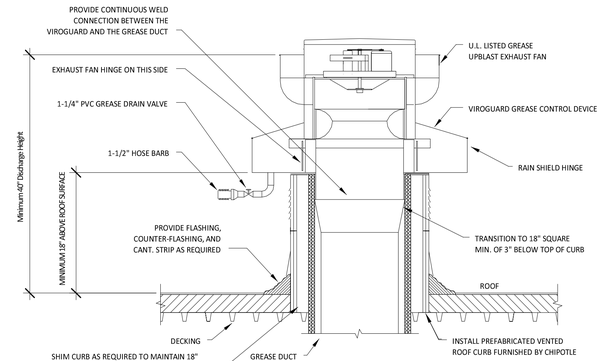


NOTE:
1. INSTALLATION SHALL BE IN ACCORDANCE WITH NFPA 96 REQUIREMENTS.
2. THE INSIDE DIMENSION OF THE GREASE DUCT AT THE CURB TERMINATION SHOULD BE 18" SQUARE FINISHED SIZE FOR THE TOP 3".
3. HINGE FAN SO IT TIPS BACK TOWARD FAN DRAIN AND TOWARD VIROGUARD DRAIN.

## 6 M300 GREASE EXHAUST FAN
N.T.S.

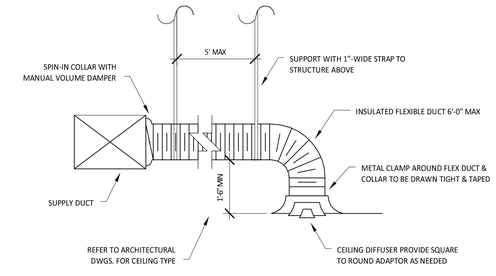


NOTE:
1. METHOD OF INSTALLATION FOR AIRTIGHT SEAL IS TYPICAL FOR ALL FLEX CONNECTIONS TO AIR DISTRIBUTION DEVICES.

## 1 M300 DIFFUSER CONNECTION
N.T.S.

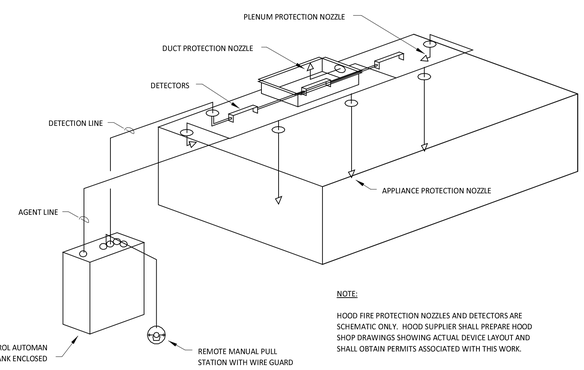


NOTE:

HOOD FIRE PROTECTION NOZZLES AND DETECTORS ARE SCHEMATIC ONLY. HOOD SUPPLIER SHALL PREPARE HOOD SHOP DRAWINGS SHOWING ACTUAL DEVICE LAYOUT AND SHALL OBTAIN PERMITS ASSOCIATED WITH THIS WORK.

## 5 M300 FIRE SUPPRESSION SYSTEM SCHEMATIC
N.T.S.

FIRE RATED ENCLOSURE - GREASE DUCTS

1. THERMAL CERAMICS FIREMASTER FASTWRAP XL OR PYROSCAT XL HAS BEEN TESTED IN ACCORDANCE WITH ASTM E2336 TO PROVIDE ZERO CLEARANCE TO COMBUSTIBLES AND MEETS THE REQUIREMENTS FOR ONE OR TWO HOUR ENCLOSURES. THROUGH PENETRATIONS FIRESTOP SYSTEMS ARE TESTED IN ACCORDANCE WITH EITHER ASTM E 814 OR UL 1479. ICC-ES APPROVAL PER REPORT ESR 2213 OR ESR 2832. UNDERWRITER'S LABORATORIES (UL) LISTINGS SHOW COMPLIANCE TO UL 1479 FOR THROUGH PENETRATION FIRESTOP SYSTEMS.
2. INSULATION APPLIED IN TWO LAYERS WITH TIGHT COMPRESSION JOINT ON INSIDE LAYER AND 3 INCH MINIMUM OVERLAPS ON BOTH PERIMETER AND LONGITUDINAL OVERLAPS ON OUTSIDE LAYER.
3. GREASE EXHAUST DUCT RUNS FROM THE HOOD EXHAUST CONNECTION UP TO THE EXHAUST FAN ON THE ROOF WITH MINIMAL TURNS OR BENDS AND MAINTAINING MINIMUM 1/4 UNIT VERTICAL RISE PER 12 UNITS HORIZONTAL RUN.
4. INSTALL UL LISTED AND WATER TIGHT ACCESS DOORS AT ALL CHANGES IN DIRECTION AND AT MINIMUM EVERY 20 FT ON HORIZONTAL RUNS. SEE DETAIL 3/THIS SHEET FOR ACCESS DOOR SPECIFICATION.
5. ROOF MOUNTED EXHAUST FAN IS MOUNTED ON A HINGED BASE WHICH ALLOWS ACCESS TO THE DUCT FROM THE ROOF.
6. SUPPORT HANGER SYSTEMS DO NOT NEED TO BE WRAPPED PROVIDED THE HANGER RODS ARE AT LEAST A MINIMUM OF 3/8 IN. DIAMETER. USE MINIMUM 2 X 2 X 1/8 IN. STEEL ANGLE OR SMACNA EQUIVALENT SUPPORT SYSTEM.
7. THERMAL CERAMICS DUCT ENCLOSURE SYSTEM SHALL BE INSTALLED IN STRICT ACCORDANCE WITH MANUFACTURERS INSTRUCTIONS.
8. THERMAL CERAMICS DUCT WRAP SHALL BE INSTALLED ON THE DUCT FROM THE HOOD CONNECTION TO THE CONNECTION TO THE FAN.

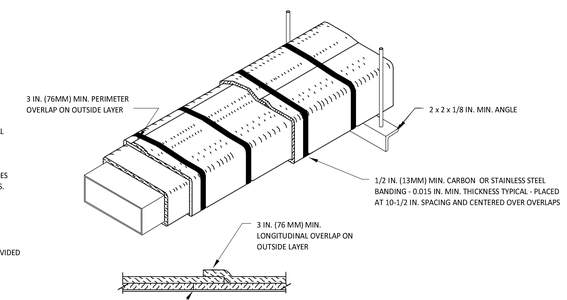


Thermal Ceramics
P.O. Box 923
Augusta, Georgia 30903-0923
Phone: (706) 560-4038

## 2 M300 FIREMASTER DUCT WRAP - UL HNKT-G18
N.T.S.

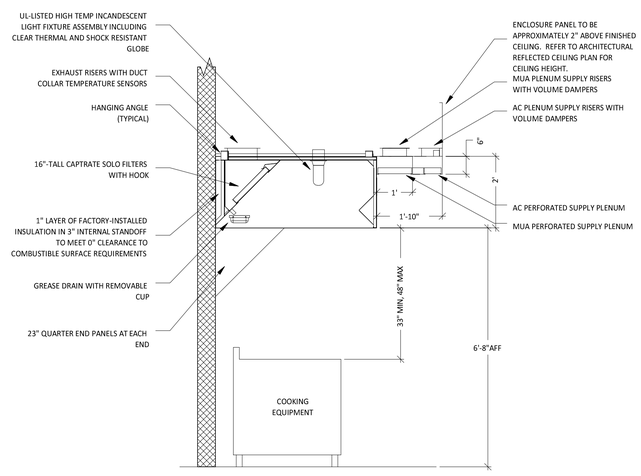


## 4 M300 HOOD SECTION VIEW
N.T.S.

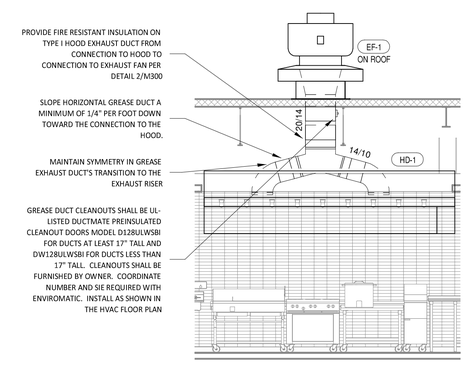


## 3 M300 DUCT SECTION AT HOOD
1/4" = 1'-0"


Consultant:
NATIONAL ENGINEERING
788 Morrison Road
Columbus, Ohio 43230
Phone: (614) 751-9610
Fax: (614) 552-5240
Contact: Andrew Janosik
(614) 328-2028
ajanosik@nationalengineering.com


STATE OF MAINE
Richard T. Jones
11411
LICENSED
PROFESSIONAL ENGINEER


COPYRIGHT 2015
THIS DRAWING IS AN INSTRUMENT OF SERVICE AND AS SUCH REMAINS THE PROPERTY OF CHIPOTLE MEXICAN GRILL, INC. PERMISSION FOR USE OF THIS DOCUMENT IS LIMITED AND CAN BE EXTENDED ONLY BY WRITTEN AGREEMENT WITH CHIPOTLE MEXICAN GRILL, INC.



CHIPOTLE MEXICAN GRILL, INC.
1401 WYNKOOP STREET, SUITE 500
DENVER, COLORADO 80202
TELEPHONE: (303) 595-4000
FAX: (303) 595-4014
INTERNET: WWW.CHIPOTLE.COM


STORE NO.: 2603
PORTLAND MARGINAL WAY
195 KENNEBEC ST
PORTLAND, ME 04101

Issue Record:

| | |
|---|---|
| 09/15/15 | PERMIT/LANDLORD REVIEW |

Revisions:

Drawn: AJJ
Checked: RTJ

Project No. 1401163

Contents:

HVAC Details

M300

Date of Last Print: 09/15/15