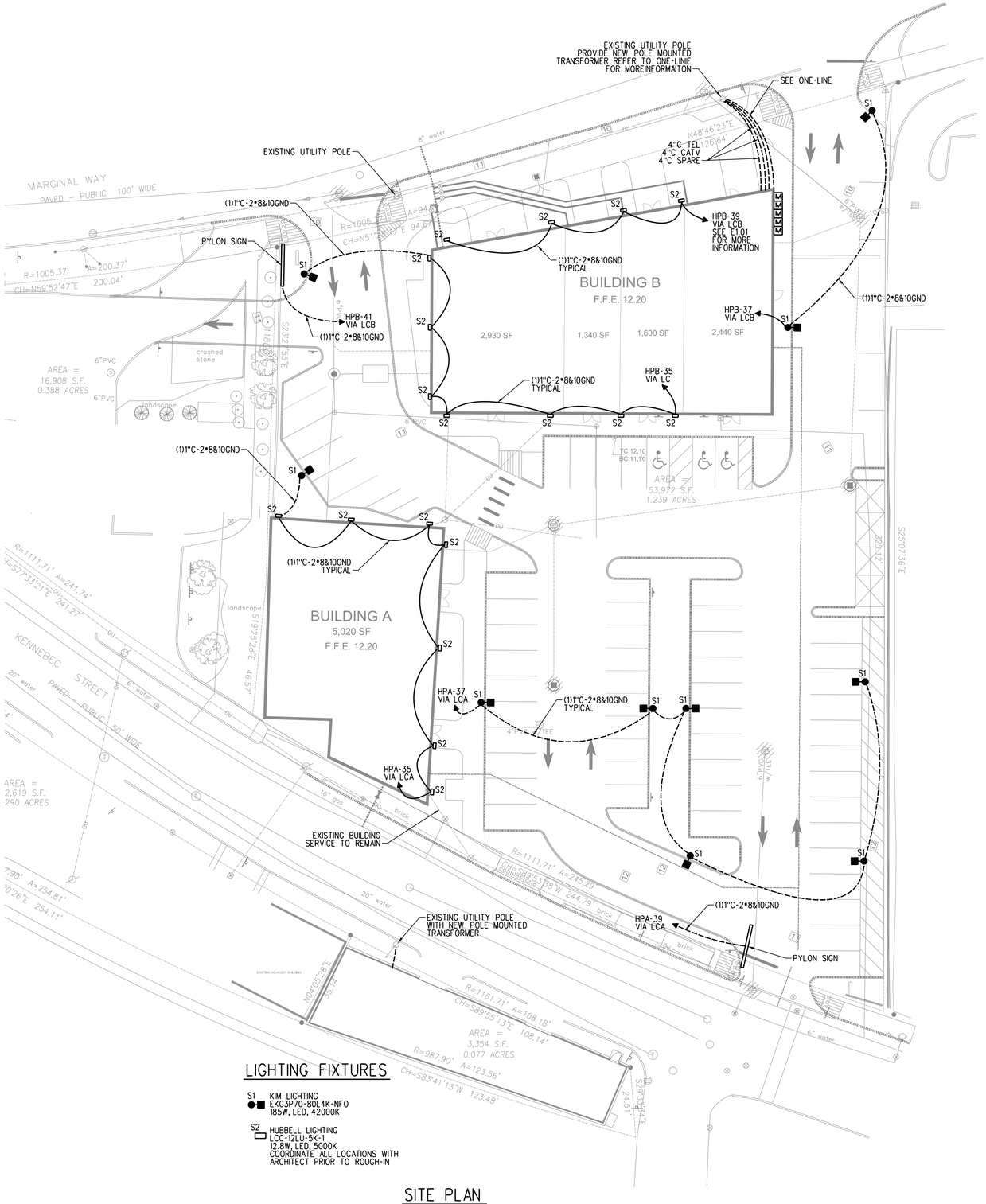

LIGHTING FIXTURES

S1 KIM LIGHTING
EKG3P70-80L4K-NFO
185W, LED, 42000K

S2 HUBBELL LIGHTING
LCC-12LU-5K-1
12.8W, LED, 5000K
COORDINATE ALL LOCATIONS WITH ARCHITECT PRIOR TO ROUGH-IN

SITE PLAN

SCALE: 1"=20'

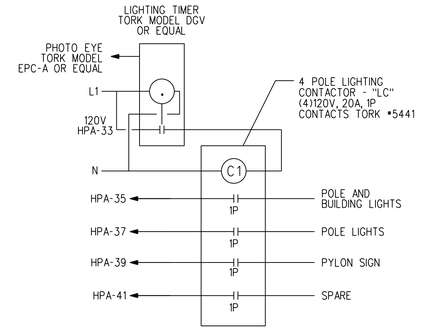

BUILDING A LIGHTING CONTACTOR "LCA" DETAIL

SCALE: NONE

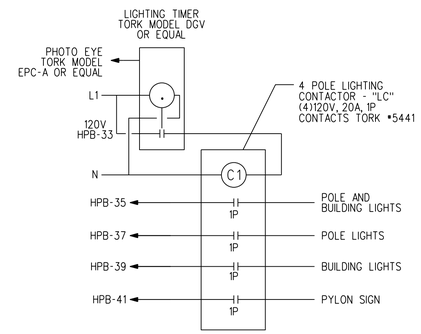

BUILDING B LIGHTING CONTACTOR "LCB" DETAIL

SCALE: NONE

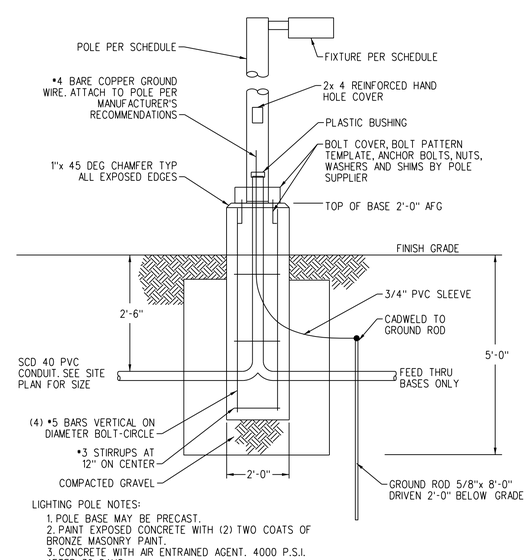

LIGHTING POLE NOTES:
1. POLE BASE MAY BE PRECAST.
2. PAINT EXPOSED CONCRETE WITH (2) TWO COATS OF BRONZE MASONRY PAINT.
3. CONCRETE WITH AIR ENTRAINED AGENT. 4000 P.S.I. AFTER 30 DAYS

POLE BASE DETAIL

SCALE: NONE

GENERAL NOTES - SITE ELECTRICAL

1. THE COMPLETE INSTALLATION SHALL CONFORM WITH ALL APPLICABLE FEDERAL, STATE AND LOCAL LAWS, CODES AND ORDINANCES, INCLUDED BUT NOT LIMITED TO APPROVED EDITIONS OF THE FOLLOWING: NATIONAL ELECTRICAL SAFETY CODE (ANSI C2): NATIONAL ELECTRICAL CODE (NFPA 70): OCCUPATIONAL SAFETY AND HEALTH ACT (OSHA) AND ALL AMENDMENTS THERETO. NOTHING CONTAINED IN THE DRAWINGS AND SPECIFICATIONS SHALL BE CONSTRUED TO CONFLICT WITH THESE LAWS, CODES, AND ORDINANCES, AND THEY ARE THEREBY INCLUDED IN THESE SPECIFICATIONS. OBTAIN PERMITS AND REQUEST INSPECTIONS FROM ALL AUTHORITIES HAVING JURISDICTION. COMPLY WITH ALL POWER, TELEPHONE, CABLE TELEVISION PROVIDER REGULATIONS AND STANDARDS.

2. THE FOLLOWING ELECTRICAL WORK SHALL BE PERFORMED UNDER THIS CONTRACT: UNDERGROUND CONDUIT, FITTINGS, AND ALL DEVICES: PROVISION OF HAND HOLES, NEW LIGHTING FIXTURES, POLES WITH ALL ACCESSORIES INCLUDING ANCHOR BOLTS AND POLE BASES: PROVISION OF UNDERGROUND CONDUIT AND WIRE TO SERVE NEW LIGHTING EQUIPMENT AND RECEPTACLES: PROVISION OF SERVICE EQUIPMENT, INCLUDING OUTDOOR CABINETS, INGROUND SPLICE BOXES, GROUNDING, METER ENCLOSURES, AND WEATHERPROOF RECEPTACLES.

3. ELECTRICAL UTILITY SHALL PROVIDE ALL ASSOCIATED OVERHEAD AND UNDERGROUND PRIMARY WIRING, PRIMARY TERMINATIONS, TRANSFORMERS, AND CONNECTIONS TO EXISTING OVERHEAD LINES. CONTRACTOR SHALL PROVIDE UNDERGROUND CONDUIT AND SECONDARY WORK.

4. PROVIDE UNDERGROUND ELECTRICAL WARNING TAPE: 6" WIDE PLASTIC TAPE, COLORED RED WITH SUITABLE LEGEND DESCRIBING BURIED ELECTRICAL LINES FOR ALL UNDERGROUND CONDUITS. LOCATE 6 INCHES BELOW FINISHED GRADE.

5. REFER TO CIVIL DRAWINGS FOR EXCAVATION AND BACKFILL OF ALL UNDERGROUND WORK.

6. EXISTING UTILITY LOCATIONS ARE APPROXIMATE AND SHALL BE FIELD VERIFIED. CONTRACTORS SHALL CONTACT DIG SAFE BEFORE BEGINNING ANY EXCAVATIONS.

7. FINAL LOCATION OF NEW UTILITIES MAY VARY FROM PLANS PENDING UTILITY COMPANY FIELD COORDINATION.

8. THE LOCAL TELEPHONE AND CABLE TELEVISION SERVICE PROVIDERS SHALL PROVIDE AND INSTALL ALL THE SITE UTILITY SERVICE CABLE TO NEW BACKBOARD IN THE CONDUITS PROVIDED BY THE CONTRACTOR AS PART OF THE SITE WORK.

9. UNDERGROUND CONDUIT SHALL BE SCHED 40 PVC. ABOVE GRADE CONDUIT SHALL BE RGS. ALL CONDUIT SWEEPS SHALL BE RGS LONG SWEEPS.

10. PROVIDE EXPANSION FITTINGS FOR ALL UNDERGROUND CONDUIT CONNECTED TO FIXED ABOVE GROUND STRUCTURES.

11. PROVIDE A LISTED INTERSYSTEM BONDING TERMINAL AT THE SERVICE ENTRANCE. INSTALL IN ACCORDANCE WITH NFPA 70,250.94

12. REFER TO ONE-LINE DIAGRAM FOR ADDITIONAL INFORMATION.

STATE OF MAINE
BRIAN J. MORRISON
NO. 9486
LICENSED
PROFESSIONAL ENGINEER

Prepared For:

Consulting Engineer:
BENNETT ENGINEERING
MECHANICAL ELECTRICAL
(207) 865-9475

Architect:
ARCHETYPE architects
48 Union Wharf Portland, Maine 04101
(207) 772-6022 Fax (207) 772-4056

Project:
CENTURY TIRE
PORTLAND, MAINE

Revisions:
1:

Scale: As Noted

Date: 03/16/2015

SITE ELECTRICAL PLAN

E1.00