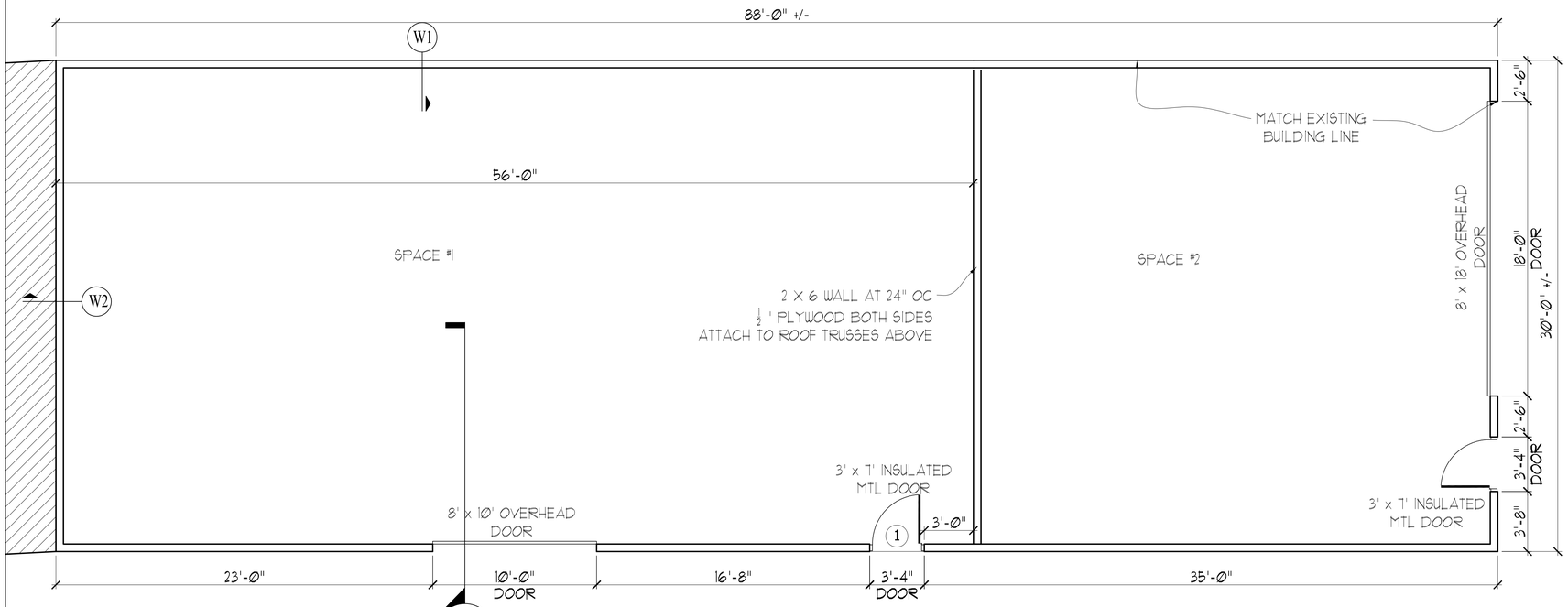

1 PLAN
SCALE: 1/4"=1'-0"

2 FRONT ELEVATION
SCALE: 1/4"=1'-0"

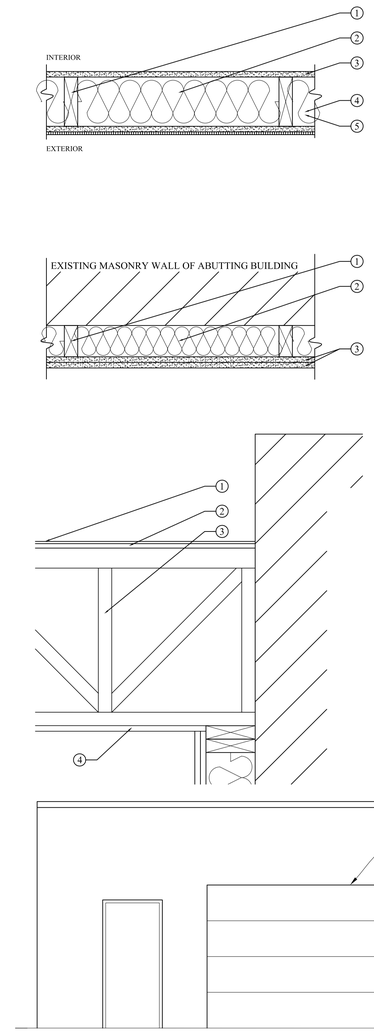

3 SIDE ELEVATION
SCALE: 1/4"=1'-0"

W1 DESIGN NO. JH/WA 60-02
NON-SYMETRICAL, NON-LOAD-BEARING WALL ASSEMBLY

1. **WOOD STUDS:** NOMINAL 2 X 6 SOLID SAWN WOOD STUDS LOCATED 24" OC WITH TWO TOP PLATES AND A SINGLE BOTTOM PLATE
2. **INSULATION:** GLASS FIBER BATT INSULATION, CONFORMING TO CSA-A101 GLASS FIBER INSULATION MINIMUM 0.6 KG/M2
3. **GYPSUM WALLBOARD:** 5/8" TYPE X GYPSUM WALLBOARD, ORIENTED VERTICALLY AND FASTENED WITH 1-3/4" CUP-HEAD GYPSUM NAILS SPACED 7" OC AT BOARD EDGES AND IN FIELD AREAS, OR 1-1/2" TYPE S DRYWALL SCREWS, SPACED 8" OC AT BOARD EDGES AND IN FIELD AREAS OF BOARDS
4. **GYPSUM SHEATHING:** 5/8" TYPE X SHEATHING FASTENED WITH 1-5/4" LONG ROOFING NAILS SPACED 7" OC. SHEATHING EDGE JOINTS SHALL BE STAGGERED FROM THOSE ON OPPOSITE SIDES OF THE WALL.
5. **FIBER CEMENT EXTERIOR SIDING:** 5/16" THICK HARDIPANEL VERTICAL SIDING, APPLIED AS PER MANUFACTURER'S INSTALLATION INSTRUCTIONS.

W2 1-HOUR FIRE WALL

1. **WOOD STUDS:** NOMINAL 2 X 4 SOLID SAWN WOOD STUDS LOCATED 24" OC WITH TWO TOP PLATES AND A SINGLE BOTTOM PLATE
2. **INSULATION:** GLASS FIBER BATT INSULATION, CONFORMING TO CSA-A101 GLASS FIBER INSULATION MINIMUM 0.6 KG/M2
3. **GYPSUM WALLBOARD:** 2 LAYERS 5/8" TYPE X GYPSUM WALLBOARD, ORIENTED VERTICALLY AND FASTENED WITH 1-3/4" CUP-HEAD GYPSUM NAILS SPACED 7" OC AT BOARD EDGES AND IN FIELD AREAS, OR 1-1/2" TYPE S DRYWALL SCREWS, SPACED 8" OC AT BOARD EDGES AND IN FIELD AREAS OF BOARDS

R1 FIRE RATED ROOF ASSEMBLY

1. 1/4" DENSDECK
2. 1/2" OSB
3. WOOD TRUSSES 24" OC
4. 5/8" GYPSUM WALLBOARD

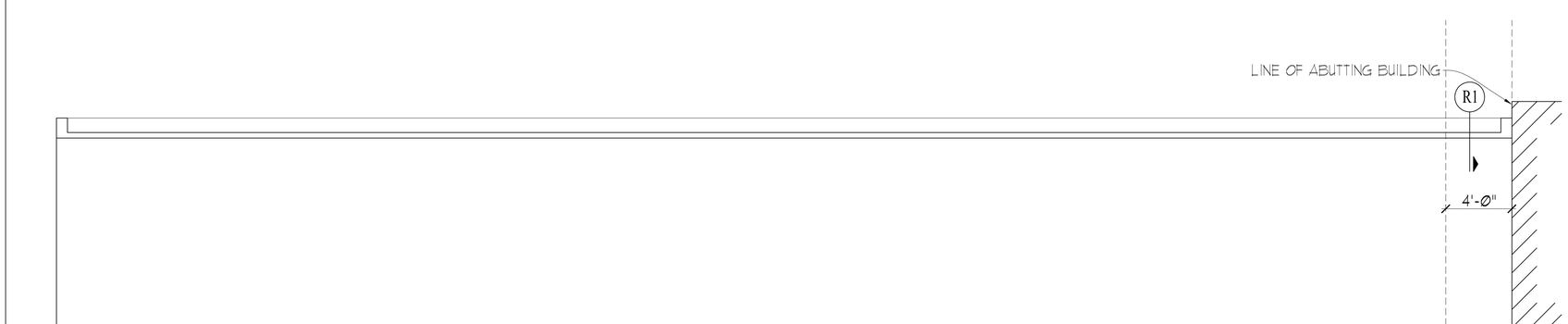

4 BACK ELEVATION
SCALE: 1/4"=1'-0"

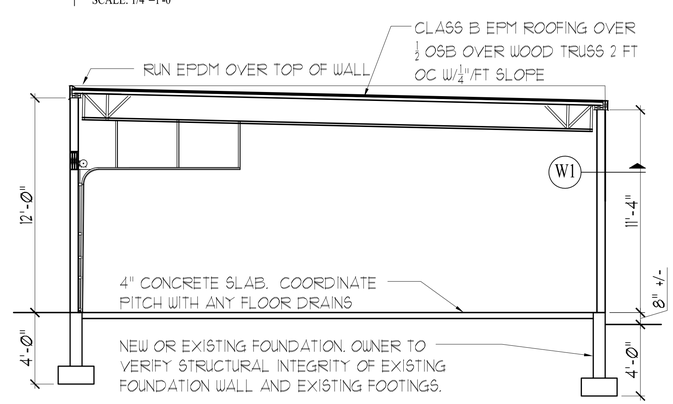

A SECTION
SCALE: 1/4"=1'-0"

shinberg CONSULTING, LLC
Office: (207) 772-7070

REGISTERED ARCHITECT
WILLIAM KENNETH HOMANS
No. 1030
STATE OF MAINE

Prepared For:
BAYSIDE VENTURES II
50 PORTLAND PIER
PORTLAND, MAINE

Consulting Engineer:
STRUCTURAL DESIGN CONSULTING
22 Oakmont Drive
Old Orchard Beach, ME 04064-4121
Tel 207.934.8038
Fax 207.934.8039

Architect:
ARCHETYPE Architects
48 Union Wharf Portland, Maine 04101
(207) 772-6022 Fax (207) 772-4056

Project:
202 KENNEBEC STREET
STORAGE BUILDING
PORTLAND, MAINE

Revisions:
Issued for Building Permit: 04/04/2011
Issued for Construction: 08/09/2011

Scale: 1/4" = 1'-0"

Date: 04 April 2011

FIRST FLOOR PLAN

A1