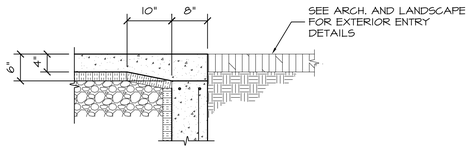

TOP OF WALL AT TYP. DOOR
3/4"=1'-0"

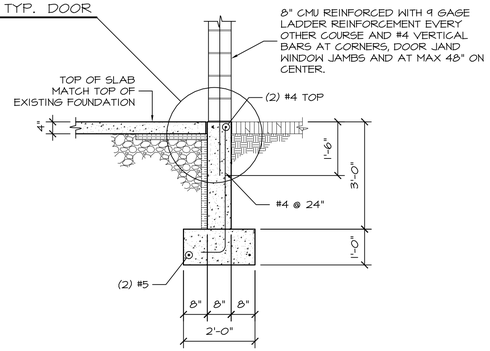

SECTION 1
1/2"=1'-0" S1.2

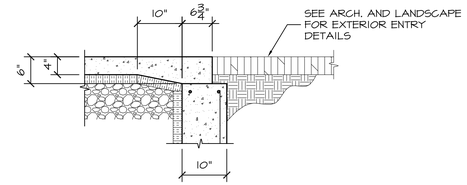

TOP OF WALL AT MAIN ENTRANCE DOOR
3/4"=1'-0"

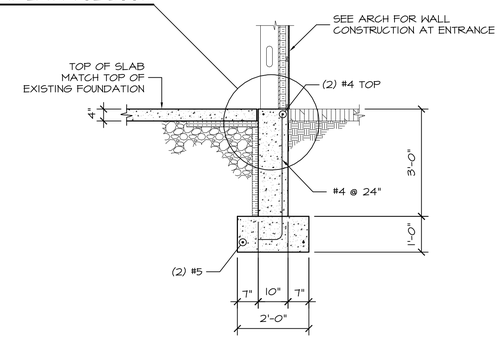

SECTION 2
1/2"=1'-0" S1.2

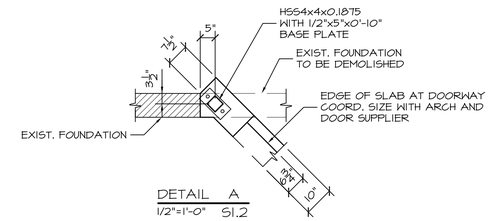

DETAIL A
1/2"=1'-0" S1.2

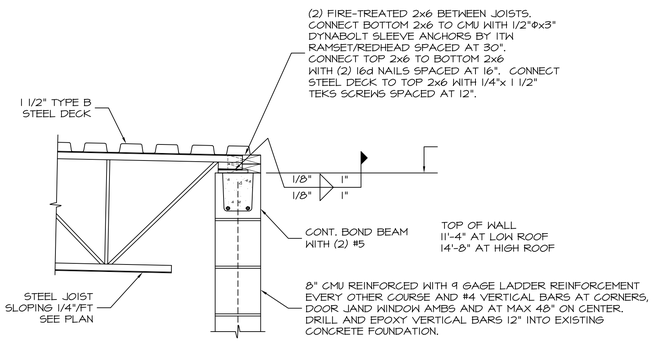

SECTION 3
1"=1'-0" S2.2

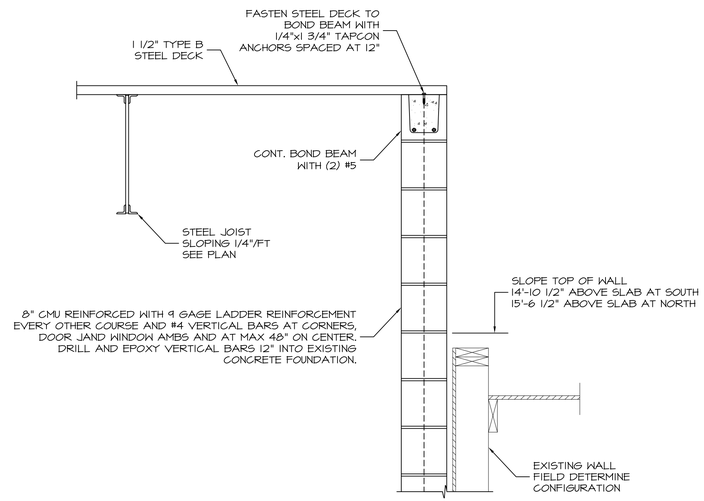

SECTION 5
1"=1'-0" S2.2

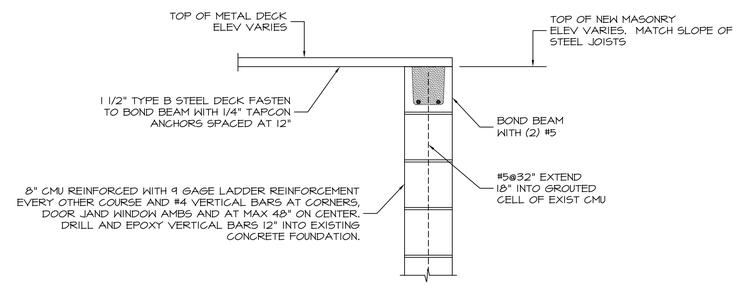

SECTION 6
1"=1'-0" S2.2

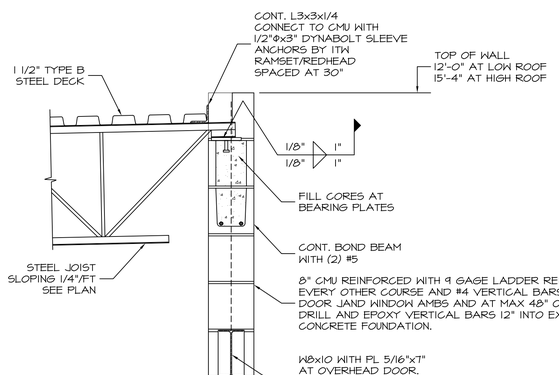

SECTION 4
1"=1'-0" S2.2

LOOSE LINTEL AND STEEL HEADER SCHEDULE	
ROUGH OPENING	LINTEL SIZE
UP TO 3'-0"	(2) L 3 1/2x3 1/2x5/16
>3'-0" TO 4'-6"	(2) L 4x3 1/2x5/16 LLV
>4'-6" TO 6'-0"	(2) L 5x3 1/2x5/16 LLV
12'-0" O.H DOOR	W8x10 WITH 3/8" BOTTOM PLATE PLATE WIDTH = WALL THICKNESS - 3/4"

ALL EXTERIOR ANGLE LINTELS AND WIDE FLANGE LINTEL BOTTOM PLATES ARE GALVANIZED.

PROVIDE 4" BEARING AT EACH END FOR OPENINGS UP TO 5'-0". PROVIDE 6" BEARING AT EACH END FOR OPENINGS OVER 5'-0".

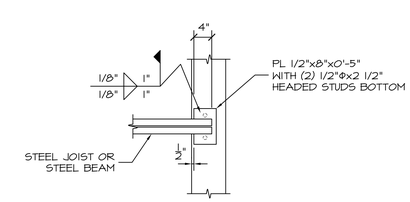

STEEL JOIST AND BEAM BEARING PLATE DETAIL
3/4"=1'-0"

STATE OF MAINE DAVID TETREAULT 4840 PROFESSIONAL ENGINEER

Reviewed for Code Compliance Inspection Division Portland, Maine Date: 03/02/17

Prepared For: Northland Enterprises, LLC
ONE CITY CENTER PORTLAND, MAINE

Structural Engineer: STRUCTURAL DESIGN CONSULTING
22 Oakmont Drive Old Orchard Beach, ME 04064-4121
Tel 207.934.8038 Fax 207.934.8039

Architect: ARCHETYPE architects
48 Union Wharf Portland, Maine 04101
(207) 772-6022 Fax (207) 772-4056

Project: CENTURY TIRE
815 MARGINAL WAY PORTLAND, MAINE

Revisions: Issued for Construction 10/21/16

Scale: As Noted

Date: 21 Oct 16

FOUNDATION AND FRAMING SECTIONS

S3.2