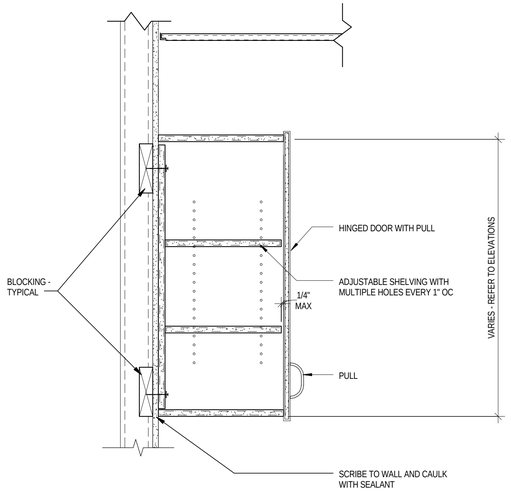

C1 SECTION DETAIL - WALL CABINET
1 1/2" = 1'-0"

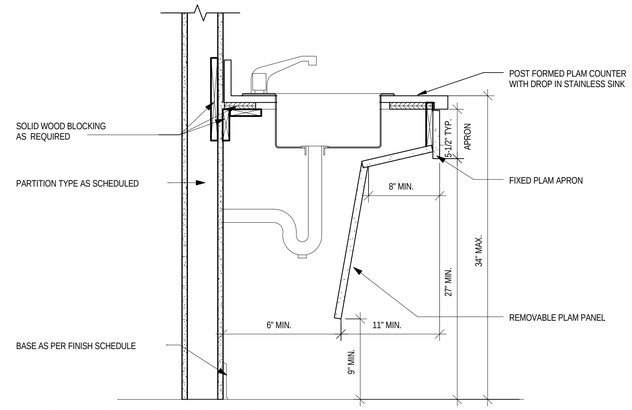

C2 SECTION DETAIL - BASE CABINET WITH ADA PANEL
1 1/2" = 1'-0"

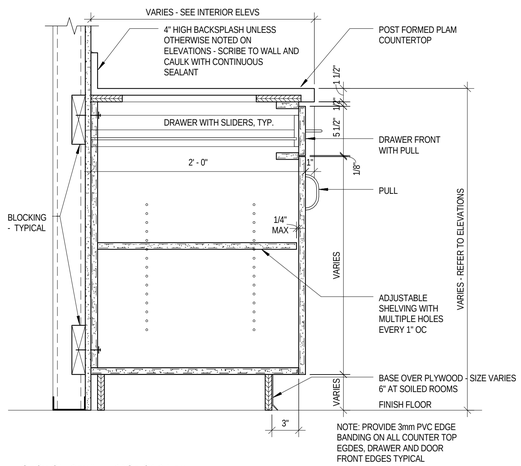

B1 SECTION DETAIL - BASE CABINET
1 1/2" = 1'-0"

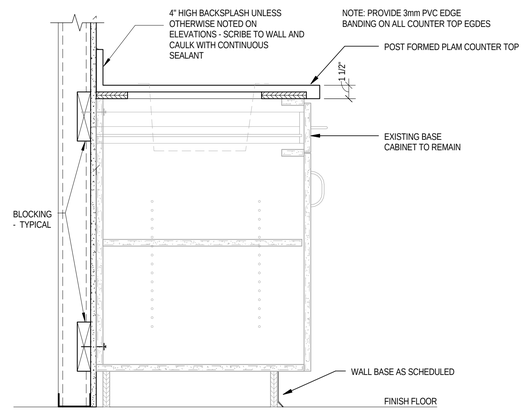

B2 SECTION DETAIL - EXISTING BASE CABINET
1 1/2" = 1'-0"

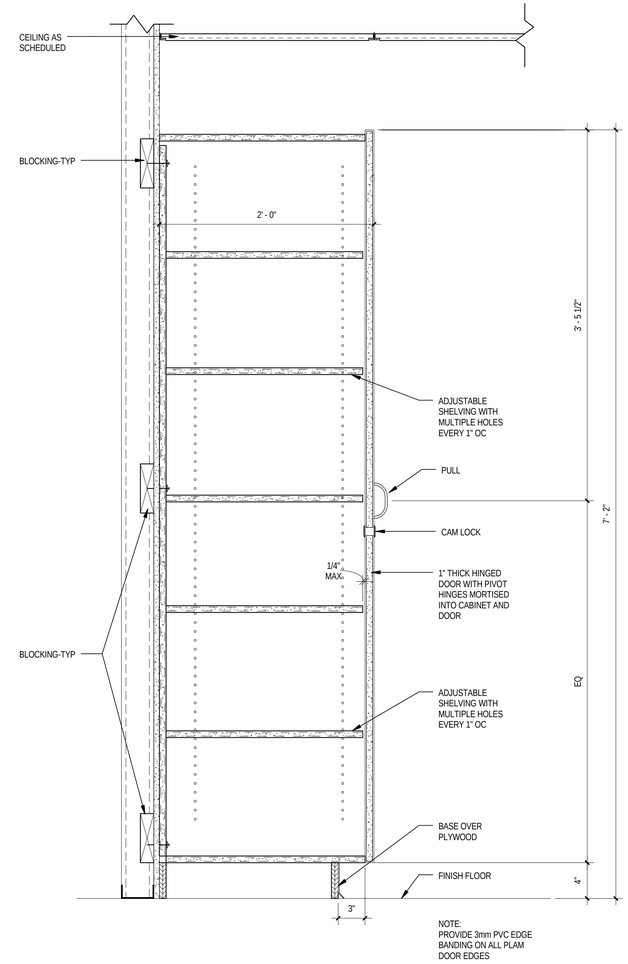

A3 SECTION DETAIL - FULL HEIGHT CABINET
1 1/2" = 1'-0"

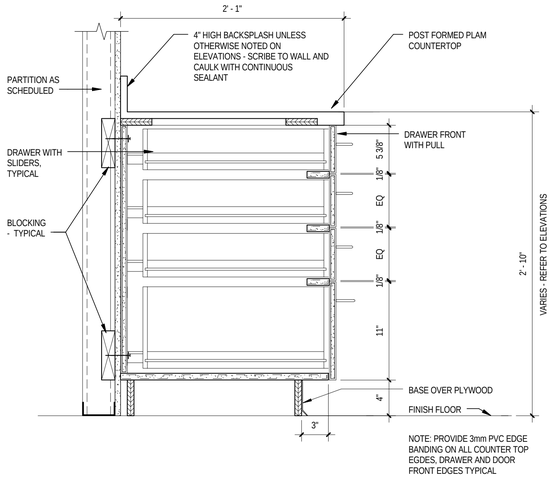

A1 BASE CABINET WITH (4) DRAWERS (TYPE M)
1 1/2" = 1'-0"

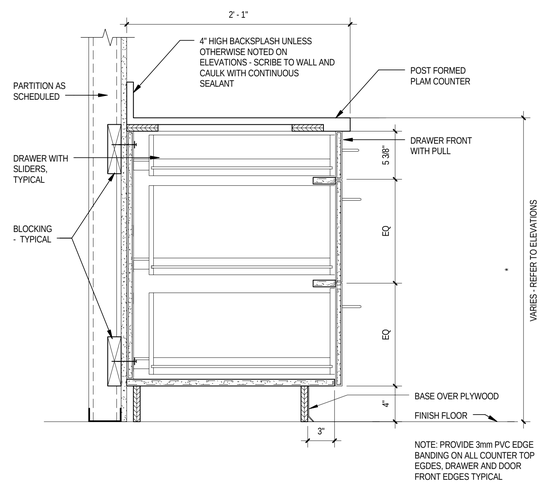

1 BASE CABINET WITH (3) DRAWERS (TYPE N)
1 1/2" = 1'-0"

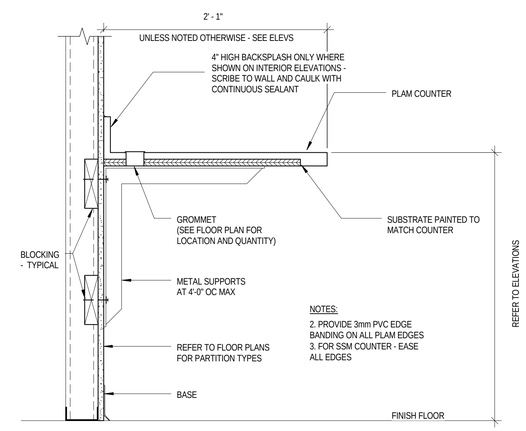

A2 SECTION DETAIL - WORK COUNTER
1 1/2" = 1'-0"

MorrisSwitzer ENVIRONMENTS FOR HEALTH ARCHITECTURE
e4h
183 Middle Street, Portland, ME 04101
888.781.8441 207.773.8941
BOSTON | DALLAS | NEW YORK | BURLINGTON | PORTLAND
e4harchitecture.com

©2017 Environments For Health

Project North

Greater Portland Health
63 Preble Street Renovation
Portland, Maine

REV	DESCRIPTION	DATE
	ISSUED FOR CONSTRUCTION	07-26-2017

LICENSED ARCHITECT CHARLES J. RIZZA, JR. STATE OF MAINE

SEAL:

PROJECT NUMBER: 2017008

DATE: 07/26/2017

SHEET TITLE AND NUMBER:

A-700

MILLWORK SECTIONS