GENERAL NOTES:

1. The notes on the drawings are not intended to replace specifications. in addition to general notes. See specifications for requirements
2. Structural drawings shall be used in conjunction with job specifications and architectural, mechanical, electrical, plumbing, and site drawings. Consult, openings, chases, inserts, reglets, sleeves, depressions, and other details not shown on structural drawings.
3. All dimensions and conditions must be verified in the field. Any discrepancies shall be brought to the attention of the engineer before proceeding with the affected part of the work.
4. Do not scale plans.
5. Sections and details shown on any structural drawings shall be considered typical for similar conditions.
6. All propietary products shall be installed in accordance with the manufacturers written instructions.
7. The structure is designed to be self supporting and stable after the erection is complete. It is the contractor's sole responsibility to determine erection procedures and sequencing to ensure the safety of the building and its components during erection. This includes the addition of necessary shoring, sheeting temporary bracing, guys or tiedowns. Such material shall remain the property of the contractor after completion of the project.
8. All applicable federal, state, and municipal regulations shall be followed, including the federal department of labor occupational safety and health act.

DESIGN LOADS:

1. Building code: IBC (2009) International Building Code.
2. Design Live Loads: (Ground Snow load = 50 psf)
   Roof ..... 40 psf + drift as applicable

   - Mechanical Roof Top Unit (RTU) weight:

   RTU #3 YORK MODEL ZF090N11D2B1AAA1A1.....WGT=1075#
   RTU #4,#8, & #10 YORK MODEL ZE048H07B2C1AAA1A1....WGT=651#
   RTU #5 YORK MODEL ZE036H05B2C1AAA1A1.....WGT=568#
   RTU #6 YORK MODEL ZE060H10B2C1AAA1A1.....WGT=689#
3. Design wind loads are based on exposure B using 100 mph basic wind speed.
4. Seismic Design Utilizes a Bearing wall system: Light frame walls with shear panels – wood structure panels/sheet steel panels. Analysis Procedure shall be equivalent Lateral Force Procedure per IRC 2009.

TIMBER FRAMING:

1. All Timber framing shall be in accordance with the AITC timber construction manual or the national design specification (NDS) – latest edition
2. Individual timber framing members shall be visually graded, minimum grade #2 Spruce–Pine–Fir (SPF), kiln dried to 19% maximum moisture content.
3. Timber shall be southern yellow pine treated with ACQ water borne preservative in accordance with AWPA treatment C1 with 0.40 PCF retainage for items in contact with roofing, masonry or concrete with 0.60 PCF retainage for items in contact with earth.
4. Metal connectors shall be used at all timber to timber connections or as noted on the design drawings. All metal connectors in contact with pressure treated timber shall be hot–dippped galvanized.
5. Provide Simpson H2.5A hurricane anchors where timber framing and/or trusses bear on bearing walls and structural beams.
6. Nails and screws not specified shall conform with IBC 2009. All nails and screws in contact with pressure treated timber shall be stainless steel.
7. Provide ½" thick APA rated exterior wall sheathing fastened w/ 10d nails @ 4" o.c. at panel edges and 6" o.c. intermediate. Lap sheathing 1'–0" minimum over existing structure (Where applicable).
8. Provide ⅝" thick APA rated roof sheathing fastened w/ 10d nails @ 6" o.c. at panel edges and intermediate.
9. Provide ¾" thick APA rated floor sheathing fastened w/ construction adhesive and 10d ring shank nails @ 6" o.c. at panel edges and intermediate.
10. LVL indicated laminated veneer lumber beams manufactured by Boise Cascade or approved equal.

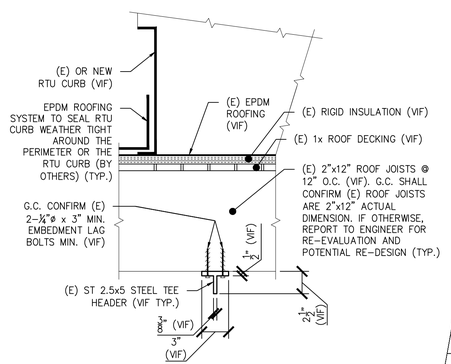

SECTION 1/S1
1 1/2" = 1'-0"

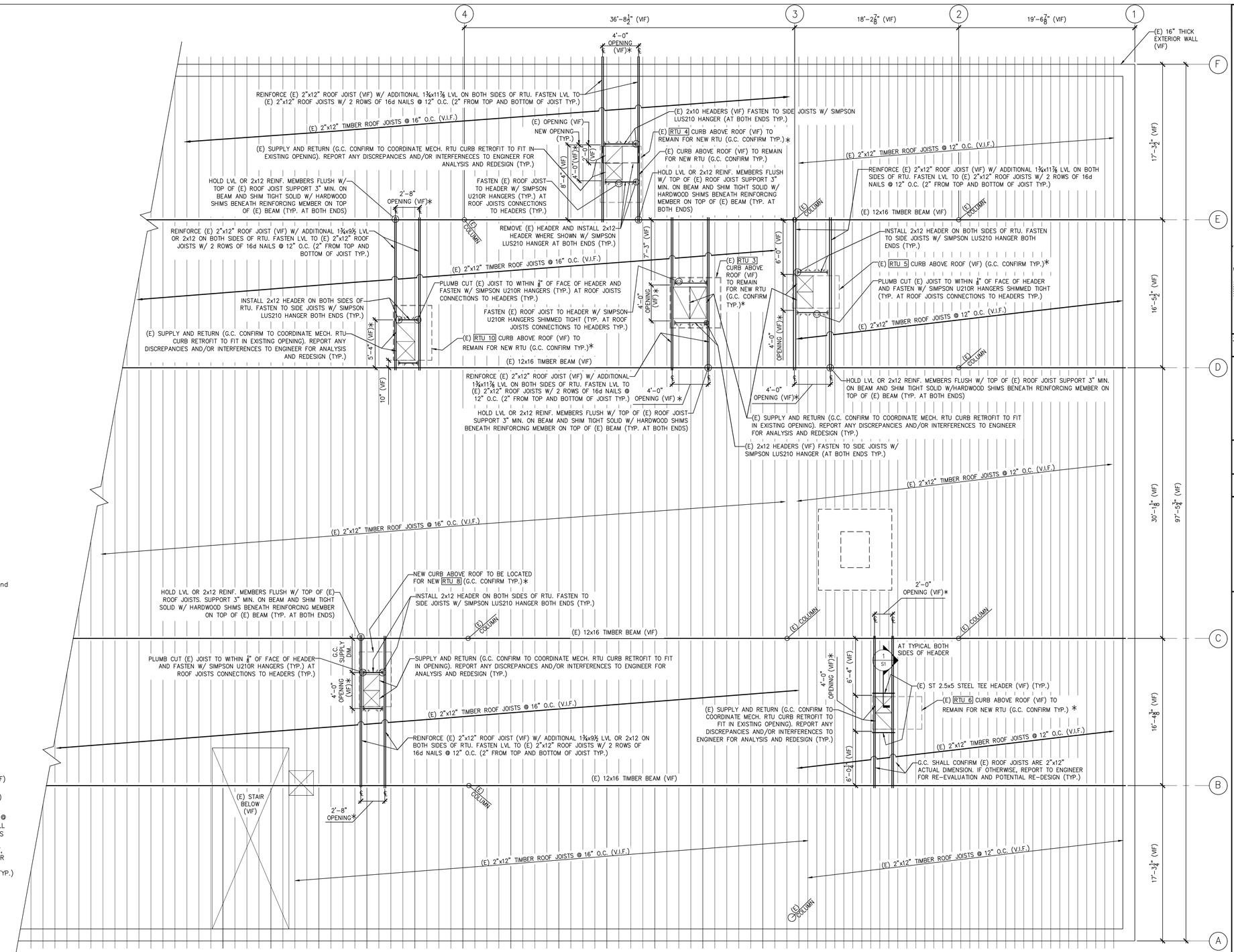

RTU SUPPORT- PARTIAL ROOF FRAMING PLAN
3/16" = 1'-0"

NOTES:
1. SEE GENERAL NOTES ON DWG S1.
2. "E" INDICATES: EXISTING CONDITIONS, OR MEMBERS.
3. "TYP." INDICATES: TYPICAL (ALSO SEE GENERAL NOTE #5).
4. "V.I.F." INDICATES: G.C. SHALL "VERIFY IN FIELD" EXISTING DIMENSIONS, ELEVATIONS, OR CONDITIONS INDICATED AND REPORT ANY DISCREPANCIES TO THE ENGINEER.
5. "U.O.N." INDICATES: UNLESS OTHERWISE NOTED.
6. "S.S." INDICATES: STAINLESS STEEL.
7. "P.A.F." INDICATES: POWER ACTUATED FASTENERS; RAMSET OR APPROVED EQUAL (TYP.)
8. "RTU" INDICATES: ROOF TOP (MECHANICAL) UNIT.
9. "*" INDICATES: G.C./ MECHANICAL CONTRACTOR SHALL COORDINATE DIMENSIONS AND ELEVATIONS W/MECHANICAL ROOF TOP UNIT (RTU) SUPPLIER AND CONFIRM RETURN/SUPPLY DUCTS FIT IN (E) ROOF OPENINGS (TYP.).
10. MECHANICAL CONTRACTOR SHALL RETROFIT RTU CURBS FOR NEW RTU'S TO FIT ON EXISTING CURBS (BY OTHERS) TYPICAL 5 OR 6 PLACES.
11. MECHANICAL UNIT CURBS SHALL BE FASTENED TO THE ROOF FRAMING PER MANUFACTURERS WRITTEN INSTRUCTIONS. RTU CURBS SHALL BE SEALED WEATHER TIGHT AROUND THE PERIMETER OF THE RTU WITH EPDM ROOFING, SEALANTS, ETC. (BY OTHERS) (TYP.).

THESE DRAWINGS HAVE BEEN DEVELOPED BY L&L STRUCTURAL ENGINEERING SERVICES, INC. FOR THE TITLED SET ONLY. THE DRAWINGS ARE THE SOLE PROPERTY OF L&L ENGINEERING SERVICES, INC. AND THEY SHALL NOT BE USED, LENT, COPIED OR ALTERED WITHOUT THE WRITTEN CONSENT OF L&L STRUCTURAL ENGINEERING SERVICES, INC.

L & L STRUCTURAL
ENGINEERING SERVICES, INC.
SIX Q STREET
SOUTH PORTLAND, MAINE 04106
PHONE: (207) 767–4830
FAX: (207) 799–5432
EMAIL: JLEASURE@L-L-ENG.COM

STATE OF MAINE
JOSEPH H. LEASURE
No. 6242
LICENSED PROFESSIONAL ENGINEER

rev.	date	description	appr'd

designed by: JHL
drawn by: JH
checked by: JHL
scale: AS NOTED
date: 03/15/2017
plot date: 03/21/2017
project # 2017–032

BUILDING LOCATED AT
190 LANCASTER RD
PORTLAND, MAINE

ROOF TOP (MECHANICAL) UNITS– STRUCTURAL SUPPORT
PARTIAL ROOF FRAMING PLAN, SECTIONS AND DETAIL

S1