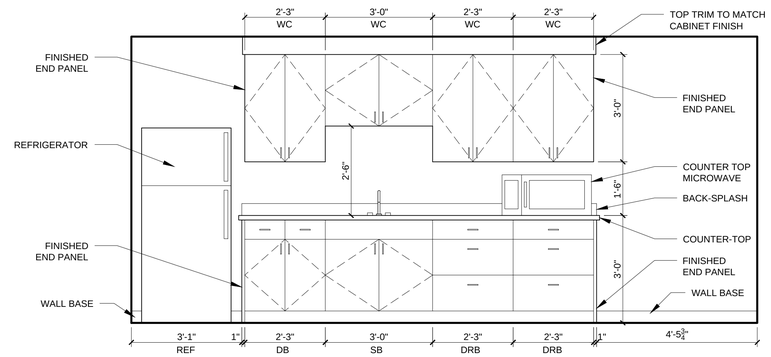

1 KITCHENETTE ELEVATION
1/8" = 1'-0"

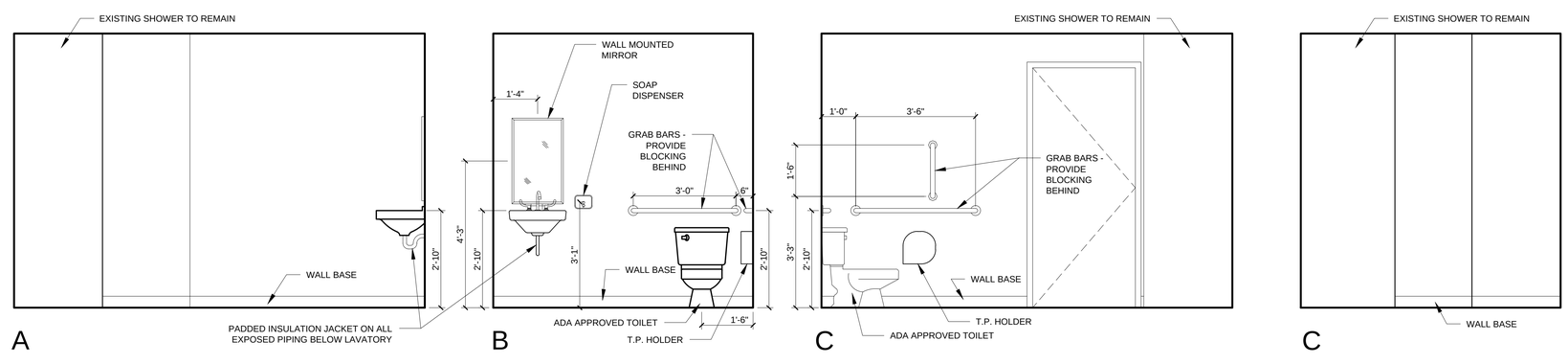

2 FIRST FLOOR ADA BATHROOM
1/8" = 1'-0"

REGISTERED ARCHITECT
RYAN J.
SENATORE
No. 3322
STATE OF MAINE

© 2016 RYAN SENATORE
ARCHITECTURE

190 LANCASTER STREET

THRID FLOOR TENANT -FIP UP
PORTLAND, MAINE

RSA
RYAN SENATORE
ARCHITECTURE
565 CONGRESS STREET
PORTLAND, MAINE04101
207-747-5159
senatorearchitecture.com

CONSULTANTS:

REVISIONS:

DATE:	02 DECEMBER 2016
PROJECT No.	1633
DRAWN BY:	
CHECKED BY:	RJS
SCALE:	AS NOTED

SHEET TITLE:
INTERIOR
ELEVATIONS

A4-1