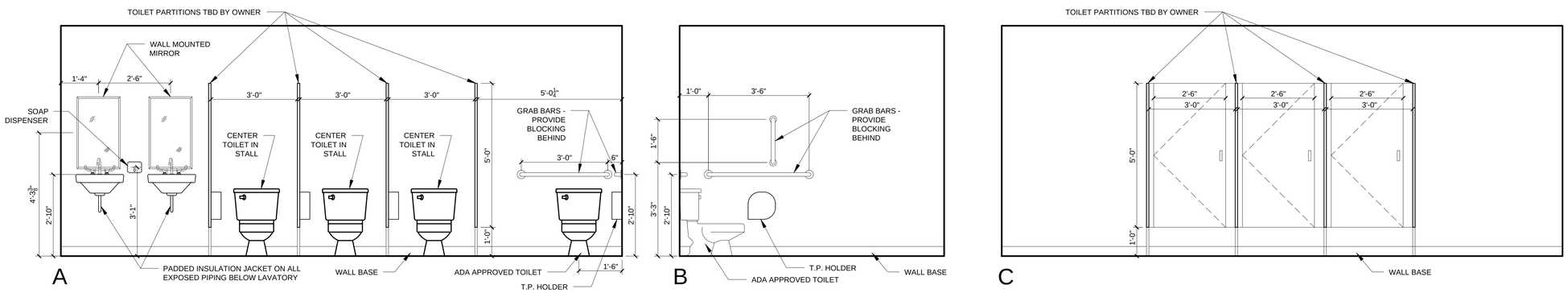

1 WOMENS BATHROOM INTERIOR ELEVATIONS
1/8" = 1'-0"

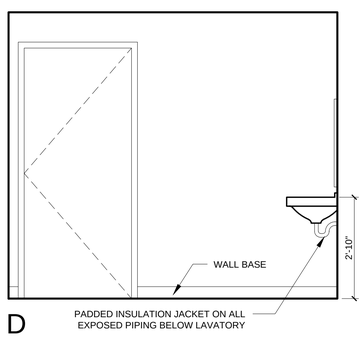

1 WOMENS BATHROOM INTERIOR ELEVATIONS
1/8" = 1'-0"

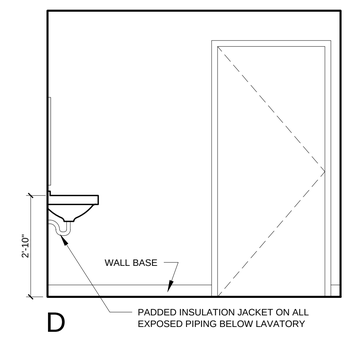

2 MENS BATHROOM INTERIOR ELEVATIONS
1/8" = 1'-0"

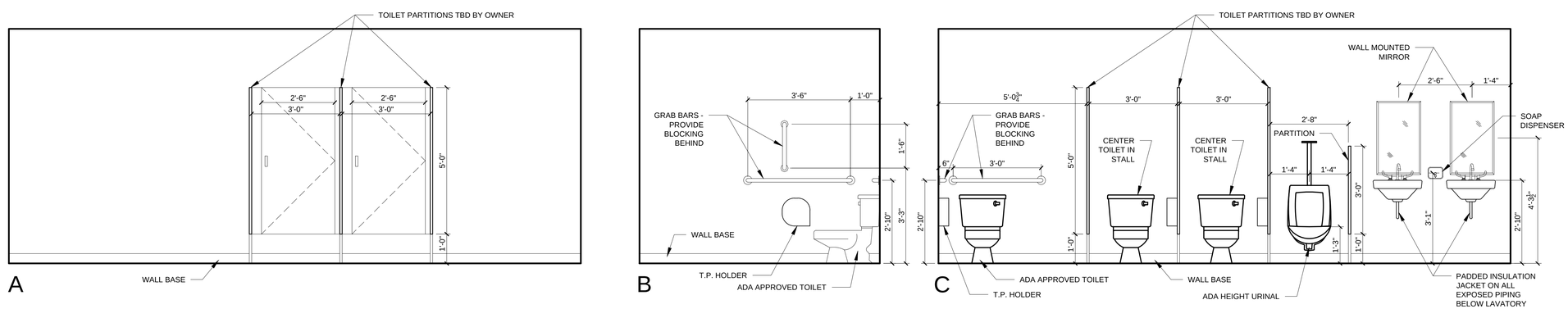

2 MENS BATHROOM INTERIOR ELEVATIONS
1/8" = 1'-0"

REGISTERED ARCHITECT
RYAN J. SENATORE
No. 3322
STATE OF MAINE

© 2016 RYAN SENATORE ARCHITECTURE

190 LANCASTER STREET

THRID FLOOR TENANT -FIP UP
PORTLAND, MAINE

RSA
RYAN SENATORE ARCHITECTURE
565 CONGRESS STREET
PORTLAND, MAINE04101
207-747-5159
senatorearchitecture.com

CONSULTANTS:

REVISIONS:

DATE:	02 DECEMBER 2016
PROJECT No.	1633
DRAWN BY:	
CHECKED BY:	RJS
SCALE:	AS NOTED

SHEET TITLE:
INTERIOR ELEVATIONS

A4-0