COPYRIGHT: Reuse or reproduction of the contents of this document is not permitted without written permission of Bild Architecture LLC

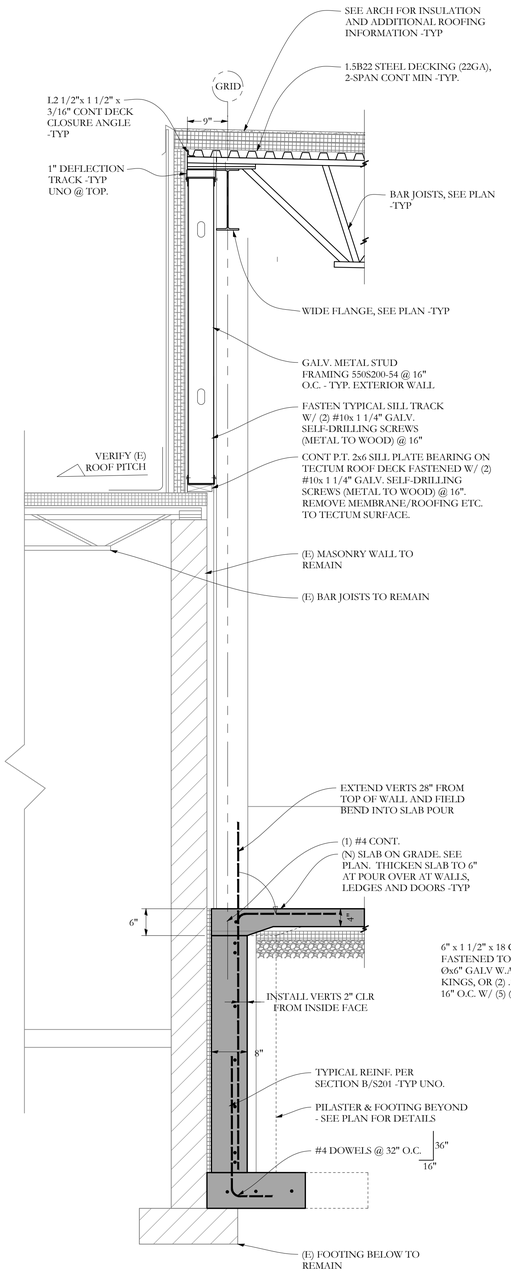

SECTION A/S201 3/4"=1'-0

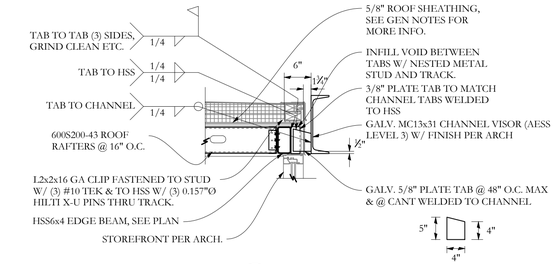

SECTION H/S201 3/4"=1'-0

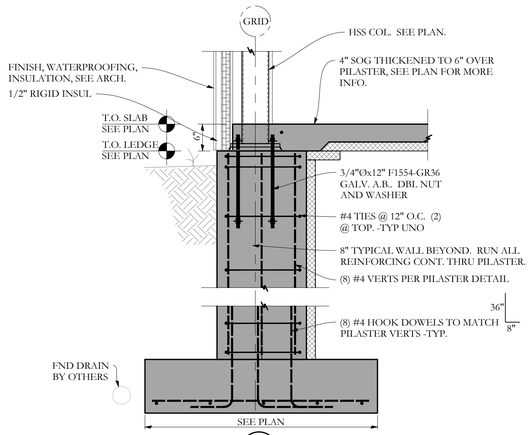

SECTION E/S201 3/4"=1'-0

TYPICAL PILASTER AT HSS

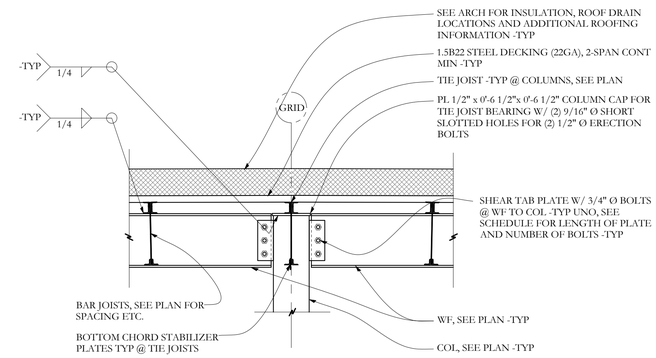

SECTION I/S201 3/4"=1'-0

TYPICAL SECTION @ ROOF STRUCT

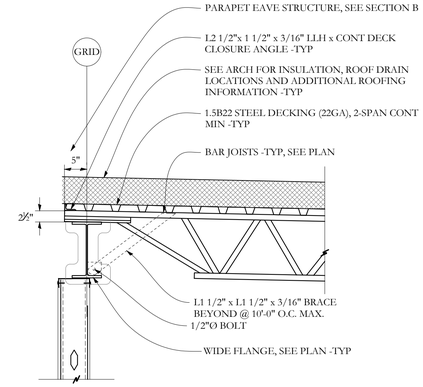

SECTION K/S201 3/4"=1'-0

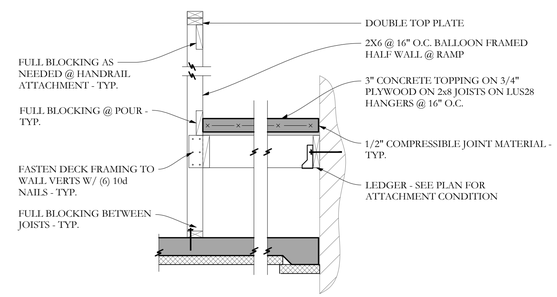

SECTION F/S201 3/4"=1'-0

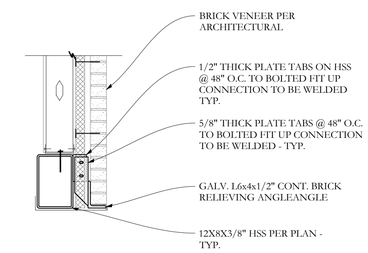

SECTION G/S201 3/4"=1'-0

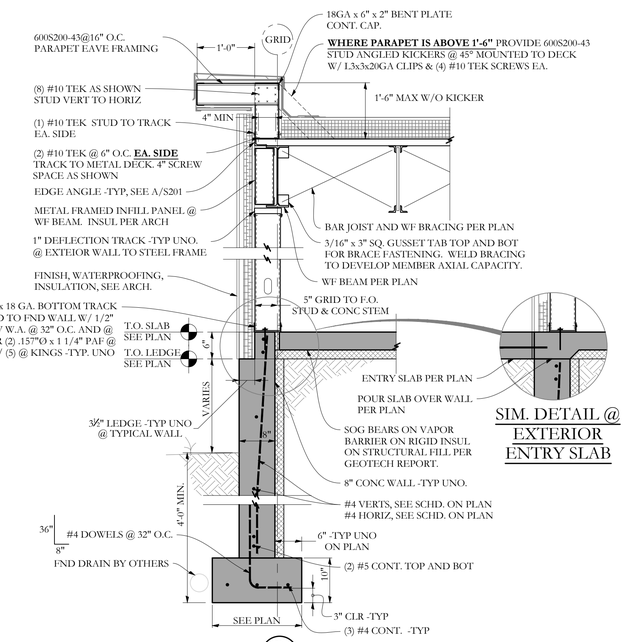

SIM. DETAIL @ EXTERIOR ENTRY SLAB

SECTION B/S201 3/4"=1'-0

TYPICAL CIP WALL @ EXTERIOR WALL PANEL

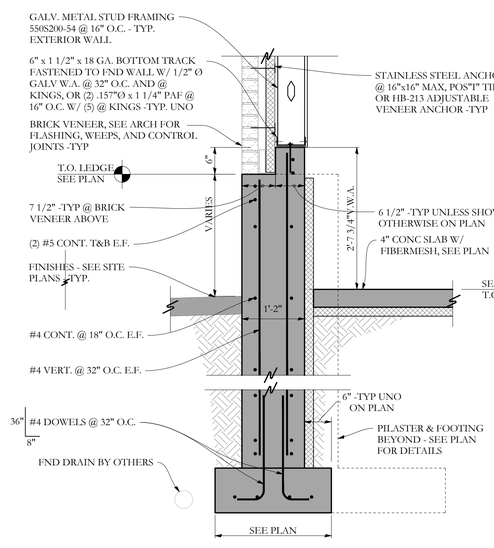

SECTION C/S201 3/4"=1'-0

TYPICAL CIP WALL @ EXTERIOR MASONRY VENEER

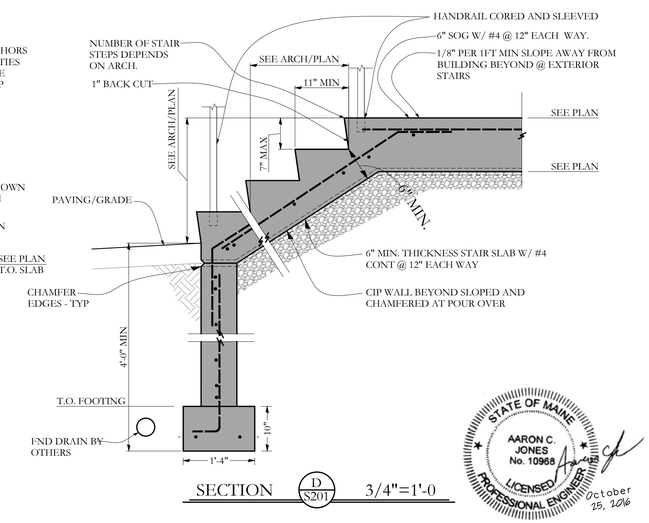

SECTION D/S201 3/4"=1'-0

STATE OF MAINE
AARON C. JONES
No. 10968
LICENSED
PROFESSIONAL ENGINEER
October 25, 2016

Structural Integrity Consulting Engineers, Inc.
77 Oak Street
Portland, ME, 04101
p. 207-774-4614
f. 866-793-7835
www.structuralinteg-com

BUILD WITH CONFIDENCE

© 2016 Structural Integrity Consulting Engineers, Inc.

SI: 16-0122

Bild Architecture
PO Box 8235
Portland, ME
04104
207.408.0168
evan@bildarchitecture.com

PROJECT NO.
13012
PROJECT NAME
88 PREBLE ST.
PORTLAND, ME

REVISIONS
1 -
2 -
3 -
4 -
5 -

DRAWN BY MKL
SHEET TITLE SECTIONS
CONSTRUCTION DOCUMENTS

ISSUE DATE 10/25/16
SHEET SCALE AS NOTED

S

S201